Leading Through Innovation

TECHNICAL DATA

TECHNISCHE DATEN

TECHNICAL DATA
SUPER CUTTING END MILLS
HOCHLEISTUNGS FRÄSER

1 NAMES OF END MILL PARTS
ERLÄUTERUNG DER FRÄSERTEILE

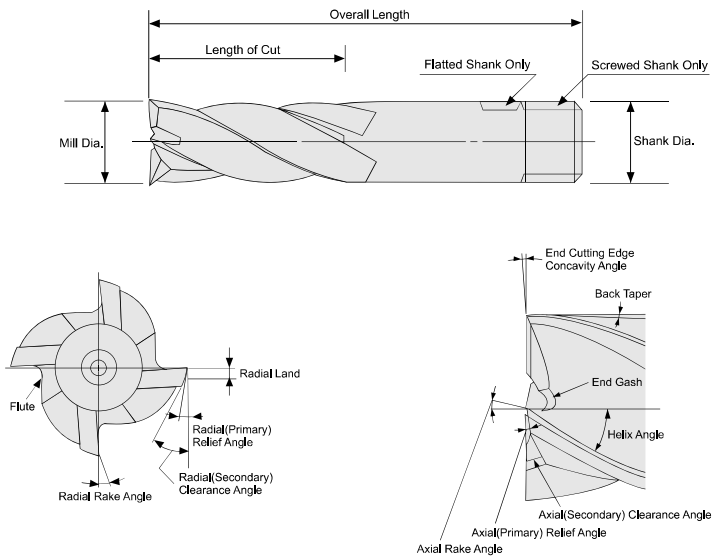

2 TYPES OF END MILL
FRÄSERTYPEN

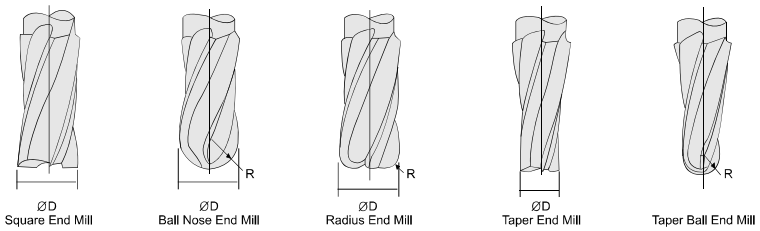

TECHNICAL DATA
SUPER CUTTING END MILLS
HOCHLEISTUNGS FRÄSER

Speed, feed and depth of cut are the most important factors to consider for best results in milling. Improper feeds and speeds often cause low production, poor work quality and unnecessary damage to the cutter.
This section covers the basic principles of speed and feed selection for milling cutters and end mills. It will serve as a guide in setting-up new milling jobs.

Geschwindigkeit, Vorschub und Schnitttiefe sind die wichtigsten Faktoren, um das beste Fräsergebnis zu erzielen. Ungeeignete Vorschübe und Geschwindigkeiten verursachen oft niedriege Produktivität, schlechte Bearbeitungsqualität und unnötige Beschädigung des Fräsers.
Dieser Abschnitt beinhaltet die Basisprinzipien von Geschwindigkeit- und Vorschubauswahl für Fräser und Scheibenfräser. Dieser Abschnitt sollte als ein Setting up-Führer neuer Fräsaufgaben dienen.

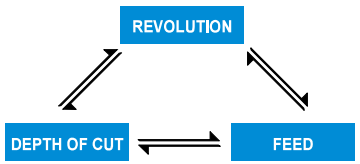

INTERRELATIONSHIP OF THREE FACTORS

3 SPEEDS
GESCHWINDIGKEIT

In milling, SPEED is measured in peripheral feet per minute.(revolution per minute times cutter circumference in feet) This is frequently referred to as “peripheral speed” “cutting speed” or “surface speed”.
Beim Fräsen, Geschwindigkeit ist gemessen in Bogenlänge pro Minute. Dies wird oft als ‘peripheral speed’, ‘cutting speed’ oder ‘surface speed’ bezeichnet.

Revolutions per Minute
Umdrehung pro Minute

$$N = \frac{1000V}{\pi D}$$

V : Cutting Speed(m/min) / Schneidgeschwindigkeit
D : Diameter of Tool(mm) / Werkzeugdurchmesser
N : Revolution per minute(rev/min) / Umdrehung pro Minute
π: 3.1416

They will have to be tempered to suit the conditons ON THE JOB. For example:
Dies muß der jeweiligen Aufgabe angepaßt werden. Zum Beispiel:

Use Lower Speed Ranges for Niedrig Geschwindigkeitsbereiche für	Use Higher Speed Ranges for Hohe Geschwindigkeitsbereiche für
Hard materials / Hartes Material	Softer materials / Weiches Material
Tough materials / Rauhes Material	Better finishes / Bessere Oberflächengüte
Abrasive materials / Abrasives Material	Smaller diameter cutters / Kleinere Fräserdurchmesser
Heavy cuts / Heavy cut	Light cuts / Light cut
Minimum tool wear / Minimale Werkzeugabnutzung	Frail work pieces or set-ups / Zerbrechliche Stücke oder Set-up
Maximum cutter life / Maximale Standzeit	Hand feed operations / Handarbeit
	Maximum production rates / Maximale Produktivität
	Non-metallics / Nichtmetallische Werkstoffe

4 FEEDS
VORSCHUB

Feed is usually measured in milimeters per minute. It is the product of feed per tooth times revolution per minute times the number of teeth in the cutter. Due to variations in cutter sizes, numbers of teeth and revolutions per minute, all feed rates should be calculated from feed per tooth. Feed per tooth is the basis of all feed rates per minute, whether the cutters are large or small, fine or coarse tooth, and are run at high or low peripheral speed. Because feed per tooth affects chip thickness. It is a very important factor in cutter life.
Highest possible feed per tooth will usually give longer cutter life between grinds and greater production per grind. Excessive feeds may over load the cutter teeth and cause breakage or chipping of the cutting edges. The following factors should be kept in mind when using the recommended starting feed per tooth.

Vorschub wird meist in Milimeter pro Minute gemessen. Er ist das Produkt von Vorschub pro Zahn, Umdrehung pro Minute oder der Anzahl der Zähne am Werkzeug. Aufgrund der Variationen in Fräsergrößen, Anzahl der Zähne und Umdrehungen pro Minute, Vorschübe sollten mit Vorschub pro Zahn gerechnet werden. Vorschub pro Zahn ist die Basis für alle Vorschubraten pro Minute unabhängig davon, ob die Fräser groß, klein, mit Fein- oder Grobgewinde und mit hoher- oder niedriger Bogengeschwindigkeit arbeiten. Vorschub pro Zahn beeinflußt Spandicke, was für ein Werkzeug ein sehr wichtiger Faktor ist. Höchstmöglicher Vorschub pro Zahn verursacht meist längeres Werkzeugleben zwischen Abnutzung und Produktivität pro Abnutzung. Exzessiver Vorschub dagegen wird den Werkzeugzahn überbelasten und Beschädigungen oder Abbrökelungen von Schneidkanten verursachen.
Bei der Nutzung von empfohlenen Vorschüben pro Zahn sollten folgende Faktoren berücksichtigt werden.

CARBIDE
HSS
CBN END MILLS
i-Xmill END MILLS
i-SMART MODULAR END MILLS
X5070 END MILLS
4G MILL END MILLS
X-POWER PRO END MILLS
TitaNox-POWER END MILLS
JET-POWER END MILLS
V7 PLUS END MILLS
ALU-POWER HPC END MILLS
ALU-POWER END MILLS
D-POWER GRAPHITE END MILLS
D-POWER CFRP END MILLS
ROUTERS
CRX S END MILLS
K-2 END MILLS
ONLY ONE COATED PM60 END MILLS
TANK-POWER END MILLS
GENERAL HSS END MILLS
MILLING CUTTERS
TECHNICAL DATA

Feed in milimeters per Minute / Vorschub in Milimeter pro Minute

F.M = F.R.×R.P.M

F.R. : Feed per Revolutions in milimeters / Vorschub pro Umdrehungen pro Minute

R.P.M .: Revolutions per Minutes / Umdrehungen pro Minute

The following factors should be kept in mind when using the recommended stating feed per tooth.

Die folgenden Faktoren sind beim Einsatz der Vorschübe pro Zahn zu berücksichtigen.

Use Higher Feeds For Höherer Vorschub für	Use Lower Feeds For Niedrigerer Vorschub für
Heavy, roughing cuts / Heavy cut, Schruppfräsen	Light, and finishing cuts / Light cut, Finishing cut
Rigid set-ups / Robustes Werkstück	Frail set-ups / Zerbrechliches Material
Easy-to-machine work materials / Leicht fräsbares Material	Hard to machine work materials / Schwer fräsbares Material
Rugged cutters / Robuster Fräser	Frail and small cutters / Dünne, kleine Fräser
Slab milling cuts / Scheibenfräsen	Deep slots / Tiefnuten
Low tensile strength materials / Material von niedriger Zugfestigkeit	High tensile strength materials / Material von hoher Zugfestigkeit
Coarse tooth cutters / Grobgewinde-Fräser	Fine tooth cutters / Feingewinde-Fräser

SPEED AND FEED CALCULATIONS FOR MILLING CUTTERS AND OTHER ROTATING TOOLS

TO FIND	HAVING		FORMULA
Surface(or Periphery) Speed in meter per Minute=S.P.M.	Diameter of Tool in milimeters Revolutions per Minute	=D =R.P.M.	$V=\frac{D\times3.1416\times R.P.M.}{1000}$
Revolutions per Minute=R.P.M.	Surface Speed in meter per Minute Diameter of Tool in milimeters	=S.P.M =D	$R.P.M.=\frac{V\times1000}{D\times3.1416}$
Feed per Revolution in milimeters-F.R.	Feed in milimeters per Minute Revolution per Minute	=F.M. =R.P.M.	$F.R.=\frac{F.M.}{R.P.M.}$
Feed in milimeters per Minute-F.M.	Feed per Revolution in milimeters Revolution per Minute	=F.R. =R.P.M.	F.M.= F.R.×R.P.M.
Number of Cutting Teeth per Minute=T.M.	Number of Teeth in Tool Revolution per Minute	=T =R.P.M.	T.M=T×R.P.M.
Feed per tooth=F.T.	Number of Teeth in Tool Feed per Revolution in milimeters	=T =R.P.M.	$F.T.=\frac{F.R.}{T}$
Feed per Tooth=F.T.	Number of Teeth in Tool Feed in milimeters per Minute Speed in Revolution per Minute	=T =F.M. =R.P.M.	$F.T.=\frac{F.M.}{T\times R.P.M.}$

TECHNICAL DATA
SUPER CUTTING END MILLS
HOCHLEISTUNGS FRÄSER

5 CASE OF RESHARPENING
NACHSCHLEIFFÄLLE

When the product finish become worse, the cutting edge must get dulled, chips become smaller and the cutting sound gets louder. In such cases, a end mill must be resharpened. The following are the damages of end mills when the resharpening is required.

Wenn die Schneidkante abstumpft, verschlechtert sich die Bearbeitungsqualität, Span wird kürzer und das Fräsgeräusch wird lauter. In solchen Fällen muß der Fräser nachgeschliffen werden. Folgend sind Beschädigungen an Fräser, die das Nachschleifen nötig machen.

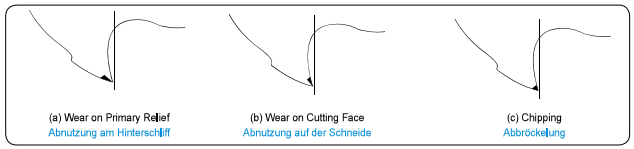

Fig. 1. Damages of Cutting Edge

6 SHARPEN AT PREDETERMINED WEAR LAND
SCHLEIFEN BEI VORBESTIMMTEN ABNUTZUNGSFLÄCHEN

Cutters should be sharpened as soons as the wear land(Fig. 2.) reaches a predetermined width. This width should permit sharpening without excessive loss of tool life. it may vary from a few hunderts to some tenth of a millimeter, depending on the type of cutter and the finish required on the product. This method is used on production runs where uneven amounts of stock is removed or where the material varies in machinability. It is also used on small quantity product lots.

Fräser sollten nachgeschliffen werden, so bald die Abnutzungsfläche die vorbestimmte Breite erreicht. Diese Breite sollte ein Schleifen ohne exzessive Verlust der Werkzeuglebensdauer ermöglichen. Sie variiert, in Abhängigkeit von Werkzeugtypen und benötigtem Finish, von Hunderstel bis einigen Zehntel Millimeter. Diese Methode wird in Prozeßen angewandt, in denen variierende Mengen von Werkstoffen abgefräst oder Materialien verschiedener Fräsbarkeiten bearbeitet werden. Ebenso in Produktionen kleiner Losgrößen.

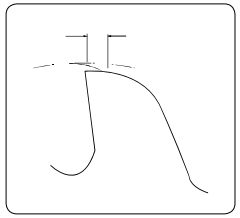

Fig. 2. Wear Land

7 RESHARPENING PERIPHERAL CUTTING EDGE
NACHSCHLEIFEN VON PERIPHER-SCHNEIDKANTEN

1 RESHARPENING PERIPHERAL CUTTING EDGE
Nachschleifen von Primärschneide

The geometry of relief angle in an end mill consist of three methods as shown in Fig.3 concave, flat, and eccentric. Recently, most end mills have the eccentric relief(eccentric sharpening). In this method, since the relief is formed an eccentric are surface in cylindrical grinding method, the roughness of the finished surface of the relief improves and the strength of cutting edge increase at the same time.(Fig.4) As a result, the tool life is improved.

Die Geometrie von Hinterschliffwinkel in einem Fräser hat, wie in Fig. 3 gezeigt, 3 verschiedene Variationen : Konkav, Flach und Exzentrisch. In letzter Zeit, die meisten Fräser haben die exzentrische Form. In dieser Methode verbessern sich Oberflächengüte der bearbeiteten Fläche und die Stärke der Schneidkanten gleichzeitig, was eine Verlängerung der Werkzeuglebensdauer zur Folge hat.

Eccentric	Concave	Flat
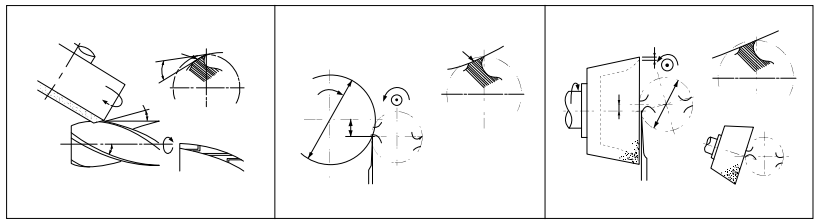		

Fig. 3. Three Types of Primary Relief

CARBIDE
HSS
CBN END MILLS
i-Xmill END MILLS
i-SMART MODULAR END MILLS
X5070 END MILLS
4G MILL END MILLS
X-POWER PRO END MILLS
TitaNox-POWER END MILLS
JET-POWER END MILLS
V7 PLUS END MILLS
ALU-POWER HPC END MILLS
ALU-POWER END MILLS
D-POWER GRAPHITE END MILLS
D-POWER CFRP END MILLS
ROUTERS
CRX S END MILLS
K-2 END MILLS
ONLY ONE COATED PM60 END MILLS
TANK-POWER END MILLS
GENERAL HSS END MILLS
MILLING CUTTERS
TECHNICAL DATA

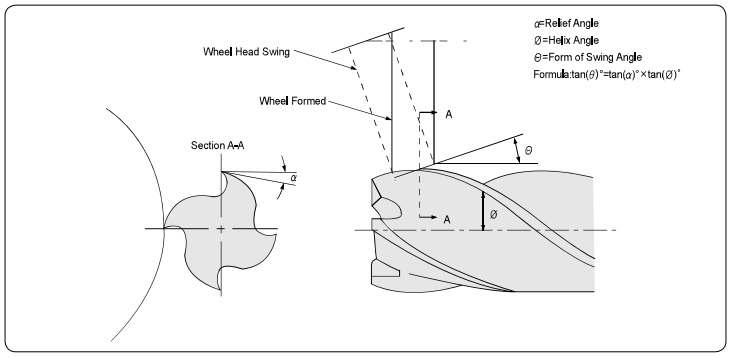

Fig. 4. Toothing of Eccentric Relief Angle

2 ANGLE OF WHEEL INCLINATION
Winkel der Radneigung.

Eccentric relief is produced with a plain wheel positioned with its axis parallel or at a slight angle with the cutter axis. The degree of relief is varied by changing the angle of wheel inclination.

Exzentrischer Hinterschliff wird mit einer, mit der eigenen Achse zur Fräsachse parallelen oder nur geringfügig geneigten Schleifscheibe produziert. Das Grad des Hinterschliffs variiert mit dem Einstellwinkel der Schleifscheiben Einstellung.

Table 1. RECOMMENDED RELIEF ON END MILLS

Mill Diameter (mm)	Eccentric relief indicator drop for relief Angles shown		Checking Distance	Wheel Angles(Deg.)Ø			Radial Relief Angles(α1)	Clearance Angles(α2)
				15° Helix	30° Helix	60° Helix		
-	Min	Max.	-	*Angle	*Angle	*Angle	*Angle	*Angle
3.0	0.100	0.130	0.40	4° 24´	9° 25´	26° 28´	16° 02´	25°
6.0	0.090	0.125	0.50	3° 18´	7° 05´	20° 25´	12° 08´	25°
12.0	0.100	0.135	0.65	2° 46´	5° 46´	17° 23´	10° 15´	25°
25.0	0.095	0.140	0.80	2° 15´	4° 15´	14° 16´	8° 21´	25°
40.0	0.085	0.125	0.80	2° 01´	4° 33´	12° 48´	7° 29´	25°
50.0	0.085	0.125	0.80	2° 01´	4° 33´	12° 48´	7° 29´	25°

The actual at the radial relief angle is normally kept within the range shown but may be varied to suit the cutter material, the work material and the operating conditions.
Die Freiwinkel sind normalerweise in den angegebenen Maßen, sie schwanken je nach Werkzeug, Werkstück†und den Einsatzbedingungen
* Angle is calculated from the basic mean at the radical angle.
Der Winkel wird von der Hauptschneide zum Radialwinkel gemessen.

TECHNICAL DATA
SUPER CUTTING END MILLS
HOCHLEISTUNGS FRÄSER

8 RESHARPENING END TEETH
NACHSCHLEIFEN DES ENDZAHNS

The three necessary operations and one option feature, along with setup suggestions are shown in Fig.5 A to D in each drawing, the shaded area indicates the surface being ground.

Die drei nötigen Operationen und eine Option werden, zusammen mit einem Rüstvorschlag, in Bild 5 A bis D gezeigt. Die dunklen Flächen zeigen Bereiche an, die nachgeschliffen werden.

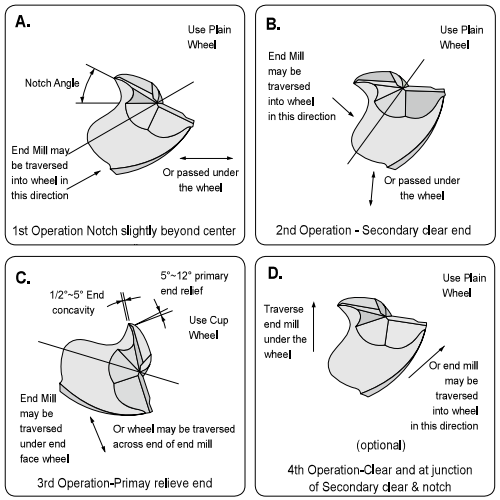

Fig 5. PROCEDURE FOR SHARPENING END OF 2 FLUTE SQUARE END MILLS

9 INSPECTION
INSPEKTION

The inspection is caculated by using the formula shown in Table1.
Procedure To Check
Radial Relief Angles
With Indicators.

1. Mount the cutter to rotate freely with no end movement.
2. Adjust the sharp pointed indicator to bear at the very tip of the cutting edge, pointing in a radial line, shown in Fig.6
3. Roll the outter the tabuleted amount gives under "checking distance" using the second indicator as control.
4. Consult chart for amount of drop for the particular diameter and relief angle.

Die Inspektion wird aufgrund der Formel aus der Tabelle 1 durchgeführt.
Prozedur, um mit Indikator radialen Hinterschliffwinkel zu messen.

1. Fräser so montieren, daß er frei rotiert ohne sich seitlich zu bewegen.
2. Indikator so justieren, daß der Stab, in radiale Richting zeigend, am äußersten Rand der Schneidkante angelegt ist (Bild 6).
3. Den Fräser um tabellierte 'Checking distance' rollen. Einen zweiten Indikator zur Kontrolle einsetzen.
4. Um den 'Drop' für den gemessenen Durchmesser und Hinterschliffwinkel zu erhalten, Chart konsultieren.

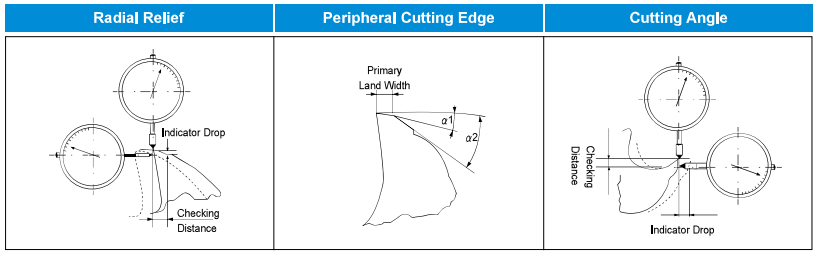

Fig. 6. Indicator Set-Up for Checking

10 TROUBLE SHOOTING IN MILLING
PROBLEMLÖSUNG BEI FRÄSEN

Trouble Problem	Occurrences of trouble Auftreten des Problems	Countermeasures Gegenmaßnahmen
Breaking of tool Werkzeugbruch	·At time of engaging with work material Beim Eintritt in das Werkstück ·When ending cut Beim Austritt aus dem Werkstück	1. Decrease feed rate. / Vermindern von Vorschub 2. Decrease projection amount / Schnitttiefe verringern 3. Shorten cutting edge length to required minimum limit Eingriffslänge reduzieren
	·During normal cutting Während des Fräsens	1. Decrease feed rate / Vorschub mindern 2. Control wear → replace tool early Abnutzung kontrollieren - Werkzeug frühzeitig ersetzen 3. Replace chuck or collet / Chuck oder Collet ersetzen 4. Decrease projection amount / Schnitttiefe verringer 5. Carry out honing / Nachschleifen 6. If 4 flute, reduce to 2 flute(clogging of chipping) Wenn 4 Schneiden, zu 2 Schneiden verkleinern 7. If dry cutting change to wet cutting utilize cutting fluid. In case of wet cutting flow oil supplied from the front, change to from rear angle of side top. Use ample with rate. Wenn Trockenfräsen, zu Naßfräsen wechseln. Wenn Naßfräsen mit Kühlflüssigkeitsversorgung von Vorne, zu einer Ölversorgung aus hinterem oder seitlich-oberem Winkel ändern. Ölversorgung reichlich gestalten
	·When changing direction of feed Wenn Vorschubrichtung geändert wird	1. Utilize circular interpolation(in case of NC machine) or temporarily stop feed(Dowelling) Circular interpolation benutzen(bei NC-Maschinen) oder Vorschub vorübergehend stoppen. 2. Reduce feed rate before and after change of directions Vor und nach dem Richtungswechsel den Vorschub mindern 3. Replace chuck or collect / Chuck oder Collet ersetzen,
Fracture of cutting edge Beschädigung der Schneidkante	·Fracture of corners Eckenbruch	1. Carry out chamfering or nose with hand lapper. Mit Handlapper eine Abschrägung durchführen. 2. Down cut → Up cut / Down cut → Up cut
	·Fracture at boundary of depth of cut Beschädigung an der Schneidtiefengrenze	1. Down cut → Up cut / Down cut → Up cut 2. Reduce cutting speed / Schneidgeschwindigkeit mindern
	·Chipping at center part or overall Abbröckelung an der Hauptschneide oder überall	1. Carry out honing. Or enlarge. / Nachschleifen oder erweitern 2. Change number of rotation(in case machine vibrates) Drehzahl ändern(wenn Maschine vibriert). 3. Increase cutting speed / Fräsgeschwindigkeit erhöhen. 4. In ease of squeaking noise during cutting, increase feed. Wenn quitschendes Fräsgeräusch zu vernehmen, Vorschub erhöhen. 5. It dry cutting use cutting fluid or blow air. Wenn Trockenfräsen, Kühlflüssigkeit oder Luft zuführen 6. Replace chuck or collet / Chuck oder Collet auswechseln. 7. Reduce cutting speed / Fräsgeschwindigkeit reduzieren.
	·Large fracturing of cutting edge Größere Beschädigung an Schneidkanten	1. Decrease feed rate / Vorschub mindern. 2. If 4 flute reduce to 2 flute Wenn 4 Schneiden, zu 2 Schneiden wechseln. 3. Carry out honing. Or enlarge / Nachschleifen oder erweitern. 4. Replace chuck or collet / Chuck oder Collet auswechseln. 5. Reduce cutting speed / Fräsgeschwindigkeit mindern. 6. If dry cutting, change to wet cutting. In case oil supply in wet cutting is from the front, change to rear at an angle or from side top. Use ample supply. Wenn Trockenfräsen, zu Naßfräsen wechseln. Wenn Naßfräsen mit Kühlflüssigkeitsversorgung von Vorne, zu einer Ölversorgung aus hinterem oder seitlich-oberem Winkel ändern. Ölversorgung reihlich gestalten.

TECHNICAL DATA
SUPER CUTTING END MILLS
HOCHLEISTUNGS FRÄSER

Trouble Problem	Occurrences of trouble Auftreten des Problems	Countermeasures Gegenmaßnahmen
Rapid tool wear Zu schnelle Werkzeugabnutzung		1. Reduce cutting speed / Fräsgeschwindigkeit mindern 2. Up cut → Down cut / Up cut - Down cut 3. Increase feed / Vorschub erhöhen 4. Utilize wet cutting or air / Naßfräsen oder Kühlluft zuführen. 5. If reground tool, improve surface roughness of flank. Beim Nachschleifen, die Oberflächenrauhheit der Hauptfreiflächen verbessern.
Inferior finished surface Ungenügende Bearbeitungsoberfläche	·Surface is good but rough Oberfläche ist gut aber rauh	1. Decrease feed / Vorschub mindern 2. In case using 2 flute, increse to 4 flute Wenn 2 Schneiden, zu 4 Schneiden wechseln
	·Small chip welding Kleine Partikelverschweißung	1. Increase cutting speed / Fräsgeschwindigkeit erhöhen 2. Utilize wet cutting air blow(ample supply) Naßfräsen und Luftzufuhr (reichlich) 3. Carry out fine honing / Feinschliff durchführen 4. Up cut → Down cut / Up cut → Down cut 5. Increase feed or enlarge finish allowance Vorschub erhöhen oder Bearbeitungstoleranz erhöhen
	·With transverse streaks Mit Querstreifen	1. Carry out fine honing / Feinschliff durchführen 2. Use water insoluble cutting fluid Wasserunlösliche Kühlflüssigkeit benutzen. 3. Down cut → Up cut / Down cut → Up cut
	·Signs of excessive cutting Zeichen exzessiven Fräsens	1. Reduce finishing depth of cut / Frästiefe reduzieren. 2. Increase cutting speed / Fräsgeschwindigkeit erhöhen. 3. Reduce feed / Vorschub mindern
Poor machining accuracy Geringe Genauigkeit der Maschine	·Finish dimensions are on minus side Bearbeitungsmaße auf der Minusseite	1. Up cut → Down cut / Up cut→ Down cut 2. Reduce finishing depth of cut / Schlichttiefe verringern reduzieren. 3. Replace chuck or collet / Chuck oder Collet auswechseln. 4. Reduce projection amount / Projektionsgröße reduzieren. 5. Increase cutting speed / Fräsgeschwindigkeit reduzieren.
	·Poor perpendicufarity Ungenauer Winkel	1. Reduce finishing depth of cut / Finishing-tiefe reduzieren. 2. Replace chuck or collet / Chuck oder Collet auswechseln. 3. Reduce projection amont / ProjektionsgröBe mindern 4. Increase cutting speed / Fräsgeschwindigkeit erhöhen. 5. 2Flute → 4 Flute / 2 Schneiden → 4 Schneiden 6. Reduce feed / Vorschub mindern. 7. Check wear rate → Replace tool Verschleiß überprüfen → Werkzeug austauschen.
Chattering Rattern		1. Increase feed rate(in case over 0.05 mm/Zahn, try reducing) Vorschub erhöhen(wenn über 0.05mm/Tooth Vorschub reduzieren). 2. Change cutting speed / Fräsgeschwindigkeit ändern. 3. Replace chuck or collet / Chuck oder Collet auswechseln. 4. Reduce projection amount / Projektionsgröße reduzieren. 5. Use 2 flute cutter for rough cutting and 4 flute for finishing 2 Schneiden Fräser zum Schruppen und 4 für Finishing einsetzen. 6. Down cut → Up cut / Down cut → Up cut

CARBIDE
HSS
CBN END MILLS
i-Xmill END MILLS
i-SMART MODULAR END MILLS
X5070 END MILLS
4G MILL END MILLS
X-POWER PRO END MILLS
TitaNox-POWER END MILLS
JET-POWER END MILLS
V7 PLUS END MILLS
ALU-POWER HPC END MILLS
ALU-POWER END MILLS
D-POWER GRAPHITE END MILLS
D-POWER CFRP END MILLS
ROUTERS
CRX S END MILLS
K-2 END MILLS
ONLY ONE COATED PM60 END MILLS
TANK-POWER END MILLS
GENERAL HSS END MILLS
MILLING CUTTERS
TECHNICAL DATA

TECHNICAL DATA

SUPER CUTTING END MILLS
HOCHLEISTUNGS FRÄSER

COMPARISON CHART SCALE FOR HARDNESS
VERGLEICHSTABELLE FÜR HÄRTESKALEN

Rockwell Hardness C Scale 150kg Brale (HRc)	Diamond Pyramid Hardness Number. Vickers (HV)	Brinell Hardness Standard 10mm Ball 29.42kN (HB)	Rockwell Hardness A Scale 60kg Brale (HRA)	Shore Scleroscope Hardness Number (HS)	Approx. Tensile Strength N/mm²
68	940	-	85.6	97	-
67	900	-	85.5	95	-
66	865	-	84.5	92	-
65	832	-	83.9	91	-
64	800	-	83.4	88	-
63	772	-	82.8	87	-
62	746	-	82.3	85	-
61	720	-	81.8	83	-
60	697	-	81.2	81	-
59	674	-	80.7	80	-
58	653	-	80.1	78	-
57	633	-	79.6	76	-
56	613	-	79.0	75	-
55	595	-	78.5	74	2079
54	577	-	78.0	72	2010
53	560	-	77.4	71	1952
52	544	500	76.8	69	1883
51	528	487	76.3	68	1824
50	513	475	75.9	67	1755
49	498	464	75.2	66	1687
48	484	451	74.7	64	1639
47	471	442	74.1	63	1578
46	458	432	73.6	62	1530
45	446	421	73.1	60	1481
44	434	409	72.5	58	1432
43	423	400	72.0	57	1383
42	412	390	71.5	56	1334
41	402	381	70.9	55	1294
40	392	371	70.4	54	1245
39	382	362	69.9	52	1216
38	372	353	69.4	51	1177
37	363	344	68.9	50	1157
36	354	336	68.4	49	1118
35	345	327	67.9	48	1079
34	336	319	67.4	47	1059
33	327	311	66.8	46	1030
32	318	301	66.3	44	1000
31	310	294	65.8	43	981
30	302	286	65.3	42	952
29	294	279	64.7	41	932
28	285	271	64.3	41	912
27	279	264	63.8	40	883
26	272	258	63.3	38	863
25	266	253	62.8	38	843
24	260	247	62.4	37	824
23	254	243	62.0	36	804
22	248	237	61.5	35	785
21	243	231	61.0	35	775
20	238	226	60.5	34	755
(18)	230	219	-	33	736
(16)	222	212	-	32	706
(14)	213	203	-	31	677
(12)	204	194	-	29	647
(10)	196	187	-	28	618
(8)	188	179	-	27	598
(6)	180	171	-	26	579
(4)	173	165	-	25	549
(2)	166	158	-	24	530
(0)	160	152	-	24	520

TECHNICAL DATA

Technical Information
Material Groups

Please visit globalyg1.com/mat for material search

ISO	VDI 3323	Material Description	Composition / Structure / Heat Treatment		HB	HRc	Examples	Page
P	1	Non-alloyed steel	About 0.15% C	Annealed	125		S15C, C15, 1015	832
	2		About 0.45% C	Annealed	190	13	S45C, C45, 1045	
	3		About 0.45% C	Quenched & tempered	250	25		
	4		About 0.75% C	Annealed	270	28	SK5, Ck75, 1080	
	5		About 0.75% C	Quenched & Tempered	300	32		
	6	Low-alloyed Steel		Annealed	180	10	SCM440, 42CrMo4, 410	
	7			Quenched & Tempered	275	29		
	8			Quenched & Tempered	300	32		
	9			Quenched & Tempered	350	38		
	10	High-alloyed steel, and tool steel		Annealed	200	15	SKD, D2	
	11			Quenched & Tempered	325	35	SKH, SUH, M42	
M	12	Stainless Steel	Ferritic / Martensitic	Annealed	200	15	SUS 420, X40Cr13, 420	839
	13		Martensitic	Quenched & Tempered	240	23		
	14		Austenitic		180	10	SUS 316, 316, X5CrNiMo 17 12 2	
K	15	Grey cast iron	Pearlitic / Ferritic		180	10	FC, GG, EN-GJL-250	841
	16		Pearlitic (Martensitic)		260	26		
	17	Nodular cast iron	Ferritic		160	3	FCD, GGG, EN-GJS-500-7	
	18		Pearlitic		250	25		
	19	Malleable cast iron	Ferritic		130		FCMW, FCMP, GTS, GJMB350-10	
	20		Pearlitic		230	21		
N	21	Aluminum-wrought alloy	Not Curable		60		SAE 1000, AlMg 1, 3.3315	843
	22		Curable	Hardened	100		SAE 7050, AlCuMg 1, 3.1325	
	23	Aluminum-cast, alloyed	≤ 12% Si, Not Curable		75		ADC12, G-AlSi12, 3.2581	
	24		≤ 12% Si, Curable	Hardened	90		C4BS, G-AlSi10Mg, 3.2381	
	25		> 12% Si, Not Curable		130			
	26	Copper and copper alloys (Bronze / Brass)	Cutting Alloys, PB>1%		110		CuZn36Pb 3, 2.0375	
	27		CuZn, CuSnZn (Brass)		90		CuZn 15, 2.0240	
	28		CuSn, lead-free copper and electrolytic copper		100		G-CuZn40Fe, 2.0590	
	29	Non-metallic materials	Duroplastic, Fiber Reinforced Plastic				CFRP	
	30		Rubber, Wood, etc.					
S	31	Heat resistant super alloys	Fe Based	Annealed	200	15	X12 NiCrSi 36-16, 1.4864	845
	32			Aged	280	30		
	33		Ni or Co Based	Annealed	250	25	Inconel 718, NiCr20TiAl, 2.4631	
	34			Aged	350	38	NiCu30Al, 2.4375	
	35			Cast	320	34	G-X120Mn12, 1.3401	
	36	Titanium alloys	Pure Titanium		400 Rm			
	37		Alpha + Beta Alloys	Hardened	1050 Rm		TiAl6V4, 3.7165	
H	38	Hardened steel		Hardened	550	55	SK3	847
	39			Hardened	630	60		
	40	Chilled cast iron		Cast	400	42		
	41	Hardened cast iron		Hardened	550	55		

P

VDI 3323	Material Description	Composition / Structure / Heat Treatment	HB	HRc
1	Non-alloyed steel	About 0.15% C, Annealed	125	

Mat'l No.	JIS	DIN	AISI/ASTM/SAE	BS	EN	AFNOR	SS	UNI	UNE / IHA	UNS	GOST	Brands
1.0037	STKM 12 C	St 37-2	-	4360 40 B	S235JR	E24-2	1311	Fe 360 B			16D	
1.0038	STKM 12 A	St 37-3	A570.36	4360 40 C	S275J2G3	E28-3	1312	Fe 360 D FF			ST14KP	
1.0045	SM 490 YA	S 355 JR	-	-	S 1207	E36-2	-	Fe 510 BFN				
1.0050	SS 50	St 50-2	A570 Gr. 50	4360 50 B	E 295	A50-2	2172	Fe 490			ST5PS	
1.0060	SM 58	St 60-2	A572 Gr. 65	4360 55 E	-	A60-2	1650	Fe 60-2			ST6PS	
1.0114		S 235 J0	-	En 40C	S 235 J0	E24-3		Fe 360 CFN				
1.0143		S 275 J0	-	-	S 275 J0	E28-3	1414	Fe 430 C				
1.0144	SM41C, SM400	St 44-3 N	A573 Gr. 81	4360 43C	S 275 J2 G3	E28-3	1412	Fe 430 D FF			ST14KP	
1.0149		Ro St 44-2	-	43C	S 275 J0 H	-	1412	Fe430C				
1.0301	S10C	C10	1010	045M10	C10	34C10, XC10		C10	F.1511	G10100	10	
1.0330	SPCC	St 12	-	DC 01	Fe P01	DC 01/Fe P01	1142	Fe P01			15KP	
1.0335	SPHE	D D 13 (StW 24)	A622(1008)	H S 3	D D 13	3C		FeP13			08KP	
1.0338	SPCE	St 4	A620(1008)	14491CR	Fe P04	Fe 14	1147	DC04/FeP04			08JU	
1.0345	SPV 50	P235 GH	A516 Gr. 65	P 235 GH	P 235 GH	A 37 CP	1330	Fe E 235		K02503		
1.0401	S15C	C15	1015	080M15	-	C18RR, XC18	1350	C15, C16	F.1110	G10170	15	
1.0402	S20C	C22	1020	050 A 20	1 C 22	C20	1450	C 20	F.1120	G10200	20	
1.0425	SPV315	P265GH/HII				A42CP	1430	Fe4101KW		K02801	16K	
1.0443	SC 450	GS-45	A2765-35	A1		E23-45M	1305					
1.0539		S355NH				TSE355-4	2134	Fe510B				
1.0545		S355N		4360-50E		E355R	2334	FeE355KG				
1.0546		S355NL		4360-50EE		E355FP	2135	FeE355KT				
1.0547		S355J0H		4360-50C		TSE355-3	2172	Fe510C				
1.0549		S355NLH					2135	Fe510D				
1.0553	SM 520 M	St52-3U	A14880-40	4360-50C		320-560M	1606	Fe510C				
1.0562	SM490A	St E 355	A633 Gr. C	P 355 N		FeE355KGN	2132	Fe E 355 KG		K12000	15GF	
1.0565		W St E 355		P 355 NH		P 355 NH	2106	Fe E 355 KW		K01600		
1.0566	SLA 37	T St E 355		P 355 NL1		P 355 NL1	2107	Fe E 355 KT				
1.0570	SM 50 YA	St 52-3	1	4360-50 C	S355JR	E36-3	2172	Fe 510 B			17G1S	
1.0715	SUM22	9SMn28	1213	230M07		S250	1912	CFSMn28	F.2111	G12130		
1.0718	SUM22L	9SMnPb28	12L13			S250Pb	1914	CF9SMnPb28	F.2112	G12134		
1.0721		10S20	1108	10S20		10S20		CF10S20	F.2121	G11080		
1.0722		10SPb20	11L08			10PbF2		CF10SPb20		G11084		
1.0736	SUM25	9SMn36	1215			S300		CF9Mn36	F.2113	G12150		
1.0737		9SMnPb36	12L14			S300Pb	1926	CF9SMnPb36	F.2114	G12144		
1.0972		S315MC		1501-40F30		E315D						
1.0976		S355MC		1501-43F35		E355D	2642	FeE355TM				
1.0982		S460MC		1501-50F45								
1.0984		S500MC				E490D	2662	FeE490TM				
1.0986		S500MC		1501-60F55		E560D		FeE560TM				
1.1121	S10C	Ck10	1010	040A10		XC10	1265	C10	F.1510	G10100	10	
1.1141	S15	Ck15	1015	040A15	32C	XC15	1370	C15	F.1110	G10150	15	
1.1151	S20C	C22E	1020	055M15		2C22	1450	C20	F.1120	G10230	20	
1.8900	S25C	StE380	A572-60	436055E			2145	FeE390KG				
		St44-2	A36	436043A		NFA35-501E28	1411					
		StE320-3Z		1501160			1421					

P

VDI 3323	Material Description	Composition / Structure / Heat Treatment	HB	HRc
2	Non-alloyed steel	About 0.45% C, Annealed	190	13

Mat'l No.	JIS	DIN	AISI/ASTM/SAE	BS	EN	AFNOR	SS	UNI	UNE / IHA	UNS	GOST	Brands
1.0501	S35C	C35	1035	080A32		1C35	1572	C35	F.113	G10350	35	
1.0503	S45C	C45	1045	060A47		XC42H1TS	1672	C45	F.114	G10450	45	
1.0511	S40C	C40	1040	080M40		1C40		C40	F.114.A	G10400	40	
1.0540	S 50 C	C50					1674	C50		G10500		
1.0551		GS-52	A2770-36	A2		280-480M	1505					
1.0553	SM 520 M	St52-3U	A14880-40	4360-50C		320-560M	1606	Fe510C				
1.0577		S 355 J 2 G 4	A738	Fe 510 D 2 FF		A52FP	2107					
1.0726		35S20	1140	212M36	8M	35MF6	1957			G11400	40	
1.0727		45S20	1146			45MF4	1973			G11460		
1.1157		40Mn4	1039	150M36	15	40M5				G10390	40G	
1.1158	S25C	C25E	1025	070M25		XC25		C25	F.1120	G10250	25	
1.1166	SMn433H	34Mn5	1536						TO.B	G15360		
1.1167	SMn438(H)	36Mn5	1335	150M36		40M5	2120	36Mn6	F.1203	G13350	35G2	
1.1170	SCMn1	28Mn6	1330	150M28	14A	20M5		C28Mn	28Mn6	G13300	30G	
1.1178	S 30 C	C30E		080M30		XC32		C30	2C30	G10300		
1.1180		C35R	1035	080A35		3C35	1572		F.1135	G10350		
1.1181	S35C	C35E	1035	080A35		XC38	1572	C36	F.1130	G10340	35	
1.1191	S45C	Ck45	1045	080A46		XC45	1672	C45	F.1140		45	
1.1206	S 50 C	C50E	1050	080M50		2C50	1674	C50		G10500	50	
1.1213	S50C	Cf53	1050	070M55		XC48HTS	1674	C53		G10500	50	

P

VDI 3323	Material Description	Composition / Structure / Heat Treatment	HB	HRc
3	Non-alloyed steel	About 0.45% C, Annealed	250	25

Mat'l No.	JIS	DIN	AISI/ASTM/SAE	BS	EN	AFNOR	SS	UNI	UNE / IHA	UNS	GOST	Brands
1.0481	SG365	17 Mn 4/P 295 GH	A516 Gr. 70	224-460B	P 295 GH	A 48 CP	2102	Fe E 295	A47RCI	K03501	14G2	
1.0501	S35C	C35	1035	080A32		1C35	1572	C35	F.1130	G10350	35	
1.0503	S45C	C45	1045	060A47		XC42H1TS	1672	C45	F.1140	G10450	45	
1.0614		C76D	1074			XC75				G10750		
1.0616		C86D	1086			XC80		C85		G10860		
1.0618		C92D	1095			XC90				G10950		
1.0726		35S20	1140	212M36	8M	35MF6	1957			G11400	40	
1.1157		40Mn4	1039	150M36	15	40M5				G10390	40G	
1.1165	SMn433H	30Mn5	1036	120M36		35M5		30Mn5	F.8211	K13300	30G2	
1.1167	SMn438(H)	36Mn5	1335	150M36		40M5	2120	36Mn6	F.1203	G13350	35G2	
1.1186	S40C	C40E	1040	060A40		2C40		C40		G10400		
1.1191	S45C	Ck45	1045	080M46		2C45	1672	C45	F.1140		45	
1.1201	S50C	C45R	1049	080M46		3C45	1660	C45	F.1145		38HM	
1.1213	S50C	Cf53	1050	070M55		XC48HTS	1674	C53		G10500	50	
1.7242	SCM 418 H	18CrMo4										
1.7337		16CrMo4-4	A387 Gr.12					A18CrMo45KW		K11564	15CM	
1.7362	SCMV 6	12CrMo195		3606-625		Z10CD5-05		16CrMo205		K41545		
		17MnV6	A572-60	436055E		NFA35-501E36	2142					

P

VDI 3323	Material Description	Composition / Structure / Heat Treatment	HB	HRc
4	Non-alloyed steel	About 0.75% C, Annealed	270	28

Mat'l No.	JIS	DIN	AISI/ASTM/SAE	BS	EN	AFNOR	SS	UNI	UNE / IHA	UNS	GOST	Brands
1.0603	S 70 C -CSP	C67	107	080A67		XC65		C67		G10700		
1.0605		C75	1075	144980HS				C75		G10740	75	
1.1203	S55C	Ck55	1055	060A57		2C55	1655	C55	F.1150	G10550	55	
1.1209		C55R	1055	070M55		3C55		C55	F.1155	G10550		
1.1221	S58C	Ck60	1060	060A62	43D	2C60	1678	C60	F.1150	G10640	60	
1.1231	S 70 C-CSP	C67E	1070	060A67		XC68	1770	C70	F.5103	G10700	65GA	
1.1248	C 75	C75E	1074	060A78		XC75	1774	C75	F.5107	G10800	75(A)	
1.1269	SK 5 -CSP	C85E	1086			XC90		C90		G10900	85(A)	
1.1274	SUP4	Ck 101	1095	060 A 96	C 100S	XC100	1870	C100	F.5117	G10950		
1.1545	SK 3	C 105 W1	W1	BW 2	C 105U	Y1 105	1880	C 100 KU	F.5118		U10A	
1.1663	SK 2	C125W	W112			Y2120					U13	

P

VDI 3323	Material Description	Composition / Structure / Heat Treatment	HB	HRc
5	Non-alloyed steel	About 0.75% C, Quenched & Tempered	300	32

Mat'l No.	JIS	DIN	AISI/ASTM/SAE	BS	EN	AFNOR	SS	UNI	UNE / IHA	UNS	GOST	Brands
1.0070		St 70-2	1055	Fe690-2FN	-	A70-2	1655	Fe 690	F.1150		55	
1.0535	S55C	C55	1055	070M55		1C55	1655	C55		J05000	55	
1.0601	S58C	C60	1060	060A62	43D	1C60		C60		G10600	60(G)	
1.1203	S55C	Ck55	1055	060A57		2C55	1655	C55	F.1150	G10550	55	
1.1221	S58C	Ck60	1060	060A62	43D	2C60	1678	C60	F.1150	G10640	60	
1.1274	SUP4	Ck 101	1095	060 A 96	C 100S	XC100	1870	C100	F.5117	G10950		
1.1545	SK 3	C 105 W1	W1	BW 2	C 105U	Y1 105	1880	C 100 KU	F.5118		U10A	
1.1663	SK 2	C125W	W112			Y2120					U13	
1.5120		38MnSi4										
1.5710	SNC236	36NiCr6	3135	640A35	111A	35NC6						
1.7701		51CrMoV4						51CrMoV4				

TECHNICAL DATA
Technical Information
Material Groups

P

VDI 3323	Material Description	Composition / Structure / Heat Treatment	HB	HRc
6	Low-alloyed Steel	Annealed	180	10

Mat'l No.	JIS	DIN	AISI/ASTM/SAE	BS	EN	AFNOR	SS	UNI	UNE / IHA	UNS	GOST	Brands
1.0116		St 37-3	A570 Gr. 36	4360-40C	S 235 J2 G3	E24-3	1312	Fe 360 D1(2)	AE235D		ST3KP	
1.0904	SKH 1, SKT 4	55Si7	9255	250A53	45	55S7	2085	55Si8	56Si7	G92550	55S2	
1.0961	SUP 7	60SiCr7	9262			60SC6		60SiCr8	60SiCr8	G92620		
1.2067		100Cr6	L3	BL3		Y100C6			100Cr6			
1.2108		90CrSi5	L1				2092	105WCR5				
1.2210		115CrV3	L2			100C3		107CrV3KU	F.520L		11KHF	
1.2241		51CrV4										
1.2330	SCM435TK	35CrMo4	4135	708A37		34CD4	2234	35CrMo4			35KHM	
1.2419	SKS31	105WCr6		105WC13		105WC13	2140	10WCr6			C WG	
1.2510	SKS3	100MnCrW4	O1	BO1		90 MWCV 5	2140	95 MnWCr 5 KU	F.5220		9KHVG	
1.2542		45WCrV7	S1	BS1			2710	45WCrV8KU			5C W25F	
1.2550		60WCrV7	S1			55WC20	2710	58WCr9KU			5KHV2SF	
1.2713	SKT4	55NiCrMoV6	L6			55NCDV7			F.520S		5C NM	
1.2721		50NiCr13	L6			55NCV6	2550		F.528			
1.2842		90MnCrV8	O2	BO2		90MV8				T31502	9G2F	
1.3501		100Cr2	E50100									
1.3505	SUJ2	100Cr6	52100	2S135	31	100C6	2258	100Cr6	F.1310		5C C 15	
1.5024		46Si7				45S7		46SI7	F.1451			
1.5025		51Si7	9259H		50Si7	51S7	2090	50Si7	F.1450			
1.5026		55Si7			56Si7	55S7	2085	55Si7	F.1440	G92550	55S2	
1.5027		60Si7	9260	251A60	60Si7	60S7		60Si7	F.1441	G92600	60S2	
1.5028	SUP7	65Si7	9260H									
1.5415	STFA 12	15Mo3	A204Gr.A	1503-243B		15D3	2912	16Mo3(KG)	F.2601	K11820		
1.5419	SCPH11	20Mo4	4419	1503-243-430			2512	G20Mo5		G44190		
1.5423	S8450M	16Mo5	4520	1503-245-420				16Mo5(KG)	F.2602	K11522		
1.5622		14Ni6	A350-LF5			16N6		14Ni6(KG)	F.2641			
1.5732	SNC415(H)	14NiCr10	3415			14NC11		16NiCr11				
1.5752	SNC815(H)	14NiCr14	3310	655M13	36A	12NC15					20X2H4A	
1.6511	SUP10	36CrNiMo4	9840	816M40	110	40NCD3		36NiCrMo4(KB)			40C N2MA	
1.6523	SNCM220(H)	21NiCrMo2	8620	805M20	362	20NCD2	2506	20NiCrMo2			20C GNM	
1.6546	SNCM240	40NiCrMo7-2	8740	311-Type7				40NiCrMo2(KB)			38C GNM	
1.6566		17NiCrMo6-4										
1.6587		17CrNiMo6		820A16		18NCD6		14NiCrMo13				
1.6657		10NiCrMo13-4						14NiCrMo131				
1.7015	SCr415(H)	10Cr3	5015	523M15		12C3				G50150	15C	
1.7033	SCr430(H)	34Cr4	5132	530A32	18B	32C4		34Cr4(KB)		G51300	35C	
1.7035	SCr440(H)	41Cr4	5140	530M40	18	42C4	2245	41Cr4		G51400	40H	
1.7131	SCR 415	16MnCr5	5115	527M17		16MC5	2511	16MnCr5		G51150	12KHN2	
1.7139		16MnCrS5					2127				18HG	
1.7176	SUP9(A)	55Cr3	5155	527A60	48	55C3	2253	55Cr3			50C GA	
1.7218	SCM420	25CrMo4	4130	CDS110		25CD4	2225	25CrMo4(KB)			20C M	
1.7220	SCM432	34CrMo4	4135	708 A 37		35CD4	2234	34CrMo4			35C M	
1.7223	SNB22-1	41CrMo4	4142					41CrMo4			40C FA	
1.7225	SCM 440 (H)	42CrMo4	4140	708 M 40	42 CrMo 4	42 CD 4	2244	42 CrMo 4	F.1252		38HM	
1.7228		55NiCrMoV6G		823M30	33		2512	653M31				
1.7262	SCM415(H)	15CrMo5				12CD4	2216	12CrMo4				
1.7321		20mOcR4					2625					
1.7335	SCM415(H)	13CrMo4-4	A182-F11	1501-620		15CD4-5	2216	14CrMo45			12C M	
1.7361		32CrMo12		722M24	40B	30CD12	2240	30CrMo12	F.124A			
1.7380		10CrMo9-10	A182F22	1501-622		12CD9-10	2218	12CrMo9			12KH8	

P

VDI 3323	Material Description	Composition / Structure / Heat Treatment	HB	HRc
6	Low-alloyed Steel	Annealed	180	10

Mat'l No.	JIS	DIN	AISI/ASTM/SAE	BS	EN	AFNOR	SS	UNI	UNE / IHA	UNS	GOST	Brands
1.7715		14MoV6-3		1503-660-440				13MoCrV6				
1.8159	SUP 10	50CrV4	6150	735A50	47	50CrV4	2230	50CrV4		G61500	50C GFA	
1.8161		58CrV4										
1.8509	SACM 645	41CrAlMo7	A355A	905M39	41B	40CAD6-12	2940	41CrAlMo7				
1.8523		39CrMoV13-9		897M39	40C			36CrMoV12				

P

VDI 3323	Material Description	Composition / Structure / Heat Treatment	HB	HRc
7	Low-alloyed Steel	Quenched & Tempered	275	29

Mat'l No.	JIS	DIN	AISI/ASTM/SAE	BS	EN	AFNOR	SS	UNI	UNE / IHA	UNS	GOST	Brands
1.5415	STFA 12	15Mo3	A204Gr.A	1503-243B		15D3	2912	16Mo3(KG)	F.2601	K11820		
1.5423	SB450M	16Mo5	4520	1503-245-420				16Mo5(KG)	F.2602	K11522		
1.5622		14Ni6	A350-LF5			16N6		14Ni6(KG)	F.2641			
1.5732	SNC415(H)	14NiCr10	3415			14NC11		16NiCr11				
1.5752	SNC815(H)	14NiCr14	3310	655M13	36A	12NC15					20X2H4A	
1.5755	SNC236	31NiCr14		653M31		18NC13	2534		F.1270			
1.6565	SNCM447	40NiCrMo6	4340	817M40	24	35NCD6	2541	35NiCrMo6(KB)			38C 2N2MA	
1.6587		17CrNiMo6		820A16		18NCD6		14NiCrMo13				
1.6657		10NiCrMo13-4						14NiCrMo131				
1.6957		26NiCrMoV14-5										
1.7015	SCr415(H)	10Cr3	5015	523M15		12C3				G50150	15C	
1.7262	SCM415(H)	15CrMo5				12CD4	2216	12CrMo4				
1.7335	SCM415(H)	13CrMo4-4	A182-F11	1503-620		15CD4-5	2216	14CrMo45			12C M	
1.7380		10CrMo9-10	A182F22	1503-622		12CD9-10	2218	12CrMo9			12KH8	
1.7715		14MoV6-3		1503-660-440				13MoCrV6				
1.7733		24CrMoV55				20CDV6		21CrMoV511				
1.7755		GS-45CrMoV10-4										
1.8070		21CrMoV511						35NiCr9				

P

VDI 3323	Material Description	Composition / Structure / Heat Treatment	HB	HRc
8	Low-alloyed Steel	Quenched & tempered	300	32

Mat'l No.	JIS	DIN	AISI/ASTM/SAE	BS	EN	AFNOR	SS	UNI	UNE / IHA	UNS	GOST	Brands
1.1730		C45W3	C45W			XC48						
1.2332	SCM(440)	47CrMo4	4142	708M40	19A	42CD4	2244	42CrMo4				
1.5736	SNC 631 (H)	36NiCr10	3435			30NC11						
1.6523	SNCM220(H)	21NiCrMo2	8620	805M20	362	20NCD2	2506	20NiCrMo2			20C GNM	
1.7033	SCr430(H)	34Cr4	5132	530A32	18B	32C4		34Cr4(KB)		G51300	35C	
1.7218	SCM420	25CrMo4	4130	CDS110		25CD4	2225	25CrMo4(KB)			20C M	
1.8515		32CrMo12		722M24	40B	30CD12	2240	32CrMo12	F.124A			

P

VDI 3323	Material Description	Composition / Structure / Heat Treatment	HB	HRc
9	Low-alloyed Steel	Quenched & Tempered	350	38

Mat'l No.	JIS	DIN	AISI/ASTM/SAE	BS	EN	AFNOR	SS	UNI	UNE / IHA	UNS	GOST	Brands
1.0904	SKH 1, SKT 4	55Si7	9255	250A53	45	55S7	2085	55Si8		G92550	55S2	
1.0961	SUP 7	60SiCr7	9262			60SC6		60SiCr8		G92620		
1.2067		100Cr6	L3	BL3		Y100C6		100Cr6				
1.2419	SKS31	105WCr6		105WC13		105WC13	2140	10WCr6			C WG	
1.2542		45WCrV7	S1	BS1			2710	45WCrV8KU			5C W25F	
1.2713	SKT4	55NiCrMoV6	L6			55NCDV7			F.5205		5C NM	
1.4882		X50CrMnNiNbN219				Z50CMNNb21-09						
1.5120		38MnSi4										
1.5710	SNC236	36NiCr6	3135	640A35	111A	35NC6						
1.5755	SNC236	31NiCr14		830m31		18NC13	2534		F.1270			
1.6511	SUP10	36CrNiMo4	9840	816M40	110	40NCD3		36NiCrMo4(KB)			40C N2MA	
1.6546	SNCM240	40NiCrMo2-2	8740	311-Tyre7				40NiCrMo2(KB)			38C GNM	
1.7035	SCr440(H)	41Cr4	5140	530M40	18	42C4	2245	41Cr4		G51400	40H	
1.7176	SUP9(A)	55Cr3	5155	527A60	48	55C3	2253	55Cr3			50C GA	
1.7220	SCM432	34CrMo4	4135	708Aa37		35CD4	2234	34CrMo4			35C M	
1.7223	SNB22-1	41CrMo4	4142					41CrMo4			40C FA	
1.7225	SCM 440 (H)	42CrMo4	4140	708 M 40	42 CrMo 4	42 CD 4	2244	42 CrMo 4	F.1252		38HM	
1.7361		32CrMo12		722M24	40B	30CD12	2240	30CrMo12	F.124A			
1.8159	SUP 10	50CrV4	6150	735A50	47	50CrV4	2230	50CrV4	51CrV4	G61500	50C GFA	
1.8161		58CrV4										
1.8509	SACM 645	41CrAlMo7	A355A	905M39	41B	40CAD6-12	2940	41CrAlMo7				
1.8523		39CrMoV13-9		897M39	40C			36CrMoV12				

P

VDI 3323	Material Description	Composition / Structure / Heat Treatment	HB	HRc
10	High-alloyed steel, and tool steel	Annealed	200	15

Mat'l No.	JIS	DIN	AISI/ASTM/SAE	BS	EN	AFNOR	SS	UNI	UNE / IHA	UNS	GOST	Brands
1.0347	SPCD	RR St 3	A619	CR 3	Fe P03	F 13		DC03/FeP03			08JU	
1.0723	SUM32	15S22		210A15			1922		F.210F			
1.2080	SKD1	X210Cr12	D3	BD3	X210Cr12	Z200C12		X205Cr12KU		T30403	KH12	
1.2162	SCR 420 H	21MnCr5				20MC5						
1.2311		40CrMnMo7				40CMD8		35cRmO8KU				
1.2312		40CrMnMoS8.6	P20+S			40CMD8S						
1.2316		X36CrMo17			X38CrMo16							
1.2343	SKD 6	X38CrMoV5-1	H11	BH11		Z38CDV5		X37CrMoV51KU		T20811	4C 5MFS	
1.2344	SKD61	X40CrMoV5-1	H13	BH13		Z40CDV5	2242	X40CrMoV511KU	F.5318	T20813	4C 5MF1S	
1.2363	SKD12	X100CrMoV5-1	A2	BA2		Z100CDV5	2260	X100CrMoV51KU	F.5227		9KH5VF	
1.2379	SKD11	X155CrVMo121	D2	BD2		Z160CDV12	2310	X165CrMoW12KU		T30402	KH12MF	KRUPP2379
1.2436	SKD 2	X210CrW12	D4(D6)	BD6		Z200CD12	2312	X215CrW121KU	F.5213		KH12	

NEXT PAGE ▶

P

VDI 3323	Material Description	Composition / Structure / Heat Treatment	HB	HRc
10	High-alloyed steel, and tool steel	Annealed	200	15

Mat'l No.	JIS	DIN	AISI/ASTM/SAE	BS	EN	AFNOR	SS	UNI	UNE / IHA	UNS	GOST	Brands
1.2510	SKS3	100MnCrW4	O1	BO1		90 MWCV 5	2140	95 MnWCr 5 KU	F.5220		9KHVG	
1.2581	SKD5	X30WCrV9-3	H21	BH21		Z30WCV9		X30WCrV93KU	F.526	T20821	3C 2W8F	
1.2601		X165CrMoV12					2310	X160CrMoV12			KH12MF	
1.2606	SKD 62	X37CrMoW51	H12	BH12		Z35CWDV5		X35CrMoW05KU	F.537	T20812	5C NM	
1.2764		X19NiCrMo4										
1.2767		X45NiCrMo4				45NCD16		40NiCrMoV8KU				
1.2842		90MnCrV8	O2	BO2		90MV8		90MnVCr8KU		T31502	9G2F	
1.3243	SKH55	S6-5-2-5	T15			KC V06-05-05-04-02	2723	HS6-5-2-5			R6M5K5	
1.3249	SKH 3	S18-1-2-5	T4	BT4		Z80WKCV18-05-04					R18KSF2	
1.3343	SKH51, SKH9	S6-5-2	M2	BM2		Z85WDCV	2722	HS652	F.5604		R6M5	
1.3348	SKH 58	S2-9-2	M7			Z100DCWV09-04-02	2782	HS292	F.5607			
1.3355	SKH 2	S18-0-1	T1	BT1		Z80WCV18-4-01					R18	
1.4718	SUH1	X45CrSi9-3	HNV3	401S45	52	Z45CS9		X45CrSi8	F.322		40C 9S2	
1.5662	SL9N60(53)	X8Ni9	ASMA353	502-650		9Ni		X10Ni9	F.2645			
1.5680		12Ni19	2515	12Ni19		Z18N5						

P

VDI 3323	Material Description	Composition / Structure / Heat Treatment	HB	HRc
11	High-alloyed steel, and tool steel	Quenched & Tempered	325	35

Mat'l No.	JIS	DIN	AISI/ASTM/SAE	BS	EN	AFNOR	SS	UNI	UNE / IHA	UNS	GOST	Brands
1.2080	SKD1	X210Cr12	D3	BD3	X210Cr12	Z200C12		X205Cr12KU		T30403	KH12	
1.2344	SKD61	X40CrMoV5-1	H13	BH13		Z40CDV5	2242	X40CrMoV511KU	F.5318	T20813	4C 5MF1S	
1.2363	SKD12	X100CrMoV5-1	A2	BA2		Z100CDV5	2260	X100CrMoV51KU	F.5227		9KH5VF	
1.2436	SKD 2	X210CrW12	D4(D6)	BD6		Z200CD12	2312	X215CrW121KU	F.5213		KH12	
1.2581	SKD5	X30WCrV9-3	H21	BH21		Z30WCV9		X30WCrV93KU	F.526	T20821	3C 2W8F	
1.2601		X165CrMoV12					2310	X160CrMoV12			KH12MF	
1.2714	SKT 4	55NiCrMoV7	6F3/L6			55NiCrMoV7			F.5205		5KHNV	
1.3202		S12-1-4-5		BT15				HS12-1-5-5				
1.3207		S10-4-3-10		BT42		Z130WKCDV						
1.3243	SKH55	S6-5-2-5	T15			KC V06-05-05-04-02	2723	HS6-5-2-5			R6M5K5	
1.3246		S7-4-2-5	M35			Z110WKCDV07-05-04		HS7-4-2-5				
1.3247	SKH 51	S2-10-1-8	M42	BM42		Z110DKCWV09-08-04		HS2-9-1-8			R2AM9K5	
1.3255	SKH 3	S18-1-2-5	T4	BT4		Z80WKCV18-05-04					R18KSF2	
1.3343	SKH51, SKH9	S6-5-2	M2	BM2		Z85WDCV	2722	HS652	F.5604		R6M5	
1.3348	SKH 58	S2-9-2	M7			Z100DCWV09-04-02	2782	HS292	F.5607			
1.3355	SKH 2	S18-0-1	T1	BT1		Z80WCV18-4-01					R18	
1.4718	SUH1	X45CrSi9-3	HNV3	401S45	52	Z45CS9		X45CrSi8	F.322		40C 9S2	
1.4935	SUH 616	X20CrMoWV121	422							S42200		
1.5680		12Ni19	2515	12Ni19		Z18N5						

TECHNICAL DATA
Technical Information
Material Groups

M

VDI 3323	Material Description	Composition / Structure / Heat Treatment	HB	HRc
12	Stainless steel	Ferritic / Martensitic, Annealed	200	15

Mat'l No.	JIS	DIN	AISI/ASTM/SAE	BS	EN	AFNOR	SS	UNI	UNE / IHA	UNS	GOST	Brands
1.4000	SUS403	X6Cr13	403	403S17		Z6C13	2301	X6Cr13	F.3110	S40300	08C 13	AISI 410S
1.4001		X7Cr14	410 S	403S7		Z8C13	2301		F.8401		08C 13	
1.4002	SUS 405	X6CrAl13	405	405S17		Z6CA13	2302	X6CrAl13		S40500		
1.4005	SUS416	X12CrS13	416	416S21		Z11CF13	2380	X12CrSC13	F.3411	S41600		AISI 416
1.4006	SUS410	X12Cr13	410	410S21	56A	Z10C13	2302	X12Cr13	F.3401	S41000	12C 13	AISI 410
1.4016	SUS430	X6Cr17	430	430S15	X8Cr17	Z8C17	2320	X8Cr17	F3113	S43000	12C 17	AISI 430
1.4027	SCS 2	GX20Cr14		420C29		Z20C13M					20C 13L	
1.4028	SUS420J2	X30Cr13	420	420S45		Z30C13	2304			S42020	20C 13	
1.4034	SUS420J2	X46Cr13		420S45		Z40C14		X40Cr14	F.3405			
1.4057	SUS431	X19CrNi17-2	431	431S29	57	Z15CN16-02	2321	X16CrNi16	F.3427	S43100	20C 17N2	431 (HT)
1.4086		GX120Cr29		452C11								
1.4104	SUS430F	X12CrMoS17	430F	420S37		Z10CF17	2383	X10CrS17	F.3117	S43020		
1.4112	SUS 440 B	X90CrMoV18	440B							S44003	95KH18	
1.4113	SUS434	X6CrMo17	434	434S17		Z8CD17-01	2325	X8CrMo17		S43400		AISI 434
1.4313	SCS5	X3CrNi13-4	CA6-NM	425C11		Z4CND13-04M	2385	(G)X6CrNi304		J91540		
1.4340		GX40CrNi274								J92615		
1.4417		X2CrNiMO5Si195	S31500				2376			S39215		
1.4418		X4CrNiMo165				Z6CND16-04-01	2387					APX4
1.4510	SUS430LX	X6CrTi17	XM8			Z4CT17		X6CrTi17	F.3115	S43035	08C 17T	430 Ti
1.4511	SUS430LK	X6CrNb17				Z4CNb17		X6CrNb17	F.3122			AXC525
1.4512	SUH409	X6CrTi12	409	LW19		Z3CT12		X6CrTi12		S40900		
1.4720		X20CrMo13										
1.4724	SUS 405	X10CrAl13	405	403S17		Z10C13		X10CrAl12	F.311		10C 13SJU	
1.4742	SUS430	X10CrAl18	430	439S15	60	Z10CAS18		X8Cr17	F.3113	S43000	15C 13SJU	
1.4747	SUH4	X80CrNiSi20	HNV6	443S65	59	Z80CSN20-02		X80CrSiNi20	F.320B	S65006		
1.4749		X18CrN28	446								15KH28	
1.4762	SUH446	X10CrAl24	446			Z10CAS24	2322	X16Cr26		S44600		
1.4871	SUH35,SUH36	X53CrMnNiN21-9	EV8	349S54		Z52CMN21-09		X53CrMnNiN219		S63008	55C 20G9AN4	
		X10CrNi15	429									
		X12CrNi18-9	302	302S31		Z10CN18-09	2330					

M

VDI 3323	Material Description	Composition / Structure / Heat Treatment	HB	HRc
13	Stainless steel	Martensitic, Quenched & Tempered	240	23

Mat'l No.	JIS	DIN	AISI/ASTM/SAE	BS	EN	AFNOR	SS	UNI	UNE / IHA	UNS	GOST	Brands
1.4000	SUS403	X6Cr13	403	403S17		Z6C13	2301	X6Cr13	F.3110	S40300	08C 13	AISI 410S
1.4001		X7Cr14	410 S	403S7		Z8C13	2301		F.8401		08C 13	
1.4006	SUS410	X12Cr13	410	410S21	56A	Z10C13	2302	X12Cr13	F.3401	S41000	12C 13	AISI 410
1.4016	SUS430	X6Cr17	430	430S15	X8Cr17	Z8C17	2320	X8Cr17	F.3113	S43000	12C 17	AISI 430
1.4021	SUS 420J1	X20Cr13	420	420S37		Z20C13	2303	14210	F.5261	S42000	20C 13	AISI 420
1.4027	SCS 2	GX20Cr14		420C29		Z20C13M					20C 13L	
1.4031	SUS 420 J2	X40Cr13	420			Z40C14	-2304		F.3404	S42080	40C 13	
1.4034	SUS420J2	X46Cr13		420S45		Z40C14		X40Cr14	F.3405			
1.4057	SUS431	X19CrNi17-2	431	431S29	57	Z15CN16-02	2321	X16CrNi16	F.3427	S43100	20C 17N2	431 (HT)
1.4104	SUS430F	X12CrMoS17	430F	420S37		Z10CF17	2383	X10CrS17	F.3117	S43020		
1.4113	SUS434	X6CrMo17	434	434S17		Z8CD17-01	2325	X8CrMo17		S43400		AL 434
1.4313	SCS5	X3CrNi13-4	CA6-NM	425C11		Z4CND13-04M	2385	(G)X6CrNi304		J91540		
1.4544		A 700	321	S.524		Z 10 CNT 18 11		X6CrNiTi1811		J92630	08C 18N12T	
1.4546		X5CrNiNb18-10	348	347S31				X6CrNiNb1811		J92640		AISI 348
1.4871	SUH35,SUH36	X53CrMnNiN21-9	EV8	349S54		Z52CMN21-09		X53CrMnNiN219		S63008	55C 20G9AN4	
1.4922		X20cRmV12-1					2317	x20cRmOnI1201				
1.4923		X22CrMoV121										Jethete X20

M

VDI 3323	Material Description	Composition / Structure / Heat Treatment	HB	HRc
14	Stainless steel	Austenitic	180	10

Mat'l No.	JIS	DIN	AISI/ASTM/SAE	BS	EN	AFNOR	SS	UNI	UNE / IHA	UNS	GOST	Brands
1.4301	SUS 304	X5CrNi18-10	304	304S15		Z5CN18-09	2332		F.3551	S30409	08C 18N10	
1.4305	SUS303	X10CrNiS18-10	303	303S21	58M	Z8CNF18-09	2346	X10CrNiS18.09	F.3508	S30300	30C 18N11	AISI 303
1.4306	SCS19	X2CrNi1911	304L	304C12	X3CrNi1810KD	Z2CN18-09	2352	GX2CrNi1910	F.3503	S30403	03KH18N11	AISI 304L
1.4308	SUS304L	GX6CrNi18-9	CF-8	304C15	58E	Z6CN18-10M	2333					CF-8
1.4310	SUS 301	X10CrNi18-8	301	301S21		Z12CN17-07	2331	X2CrNi1807	F.3517	S30100	07KH16N6	AISI 301
1.4311	SUS304LN	X2CrNiN18 10	304LN	304S62		Z2CN18-10	2371	X2CrNiN1810	F.3541	S30453	03KH18N11	
1.4312	SCS12	GX10CrNi188	305	302C25		Z10CN18-9M					10C 18N9L	AISI 305
1.4350	SUS304	X5CrNi18-9	304	304S15	58E	Z6CN18-09	2332	X5CrNi1810	F.3551	S30400		AISI 304
1.4362		X2CrNiN234	S32304			Z2CN23-04AZ	2327			S32304		AISI 2304TM
1.4371		X3CrMnNiN18887	202	284S16		Z8CMN18-08-05						
1.4401	SUS316	X5CrNiMo17-12-2	316	316S13		Z3CND17-11-01	2347	X5CrNiMo17 12 2	F.3534	S31600	08KH17H13M2T	AISI 316
1.4404	SUS316L	X2CrNiMo17-13-2	316L	316S11		Z2CND17-12	2348	X2CrNiMo1712	F.3533	S31603		AISI 316L
1.4406	SUS316LN	X2CrNiMoN17122	316LN	316S61		Z2CND17-12AZ		X2CrNiMoN1712	F.3542	S31653	07C 18N	AISI 316LN
1.4408	SCS14	GX6CrNiMo18-10	CF-8M	316C16			2343	X7CrNiMo2010	F.8414	J92900	10G2S2MSL	
1.4410	SCS 14 A	GX10CrNiMo18-9				Z5CND20-12M	2328			S32750		
1.4429	SUS316LN	X2CrNiMoN17-13-3	316Ln	316S62		Z2CND17-13AZ	2375	X2CrNiMoN17133	F.3543		03KH16N15M3	
1.4435	SUS316L	X2CrNiMo18143	316L	316S11		Z3CND17-12-03	2375	X2CrNiMo17 13 2	F.3533	S31603	03C 17N14M3	
1.4436	SUS316	X3CrNiMo17-13-3	316	316S19		Z6CND18-12-03	2343	X5CrNiMo17 12 2	F.3543	S31600		
1.4438	SUS317L	X2CrNiMo18164	317L	317S12		Z2CND19-15-04	2367	X2CrNiMo18 16 4	F.3539	S31703		AISI 317L
1.4439		X2CrNiMoN17135	(s317J6)			Z3CND18-14-06AZ						
1.4440		X2CrNiMo18-16										
1.4449	SUS317	X5CrNiMo17133	317	317S16				X5CrNiMo1815		S31700		AISI 317
1.4460	SUS 329 J1	X8CrNiMo275	329				2324			S32900		10RE51
1.4462	SUS329J3L	X2CrNiMoN2253		318S13		Z3CND22-05Az	2377			S31803		AISI 2205TM
1.4500		X7NiCrMoCuNb2520				Z3NCDU25-20M				J95150		
1.4521	SUS444	X2CrMoTi18-2	443444				2326	X2CrMoTiNb18 2	F.3123			
1.4539		X1NiCrMoCuN25205				Z2NCDU25-20	2562			N08904		AISI 904L
1.4541	SUS321	X14CrNiTi18-10	321	321S31		Z6CNT18-10	2337	X6CrNiTi18 11	F.3523	S32100	06C 18N10T	AISI 321
1.4542	SUS630	X5CrNiCuNb174	630			Z7CNU15-05						UGIMA 4542
1.4545		Z7CNU15.05	15-5PH							S15500		AISI 15-5
1.4547		X1CrNiMoN20187	S31254				2378			S31254		Uranus B25 6Mo
1.4550	SUS347	X6CrNiNb18-10	347	347S17	58F	Z6CNNb18-10	2338	X6CrNiNb18 11	F.3552	S34700	08C 18N12B	AISI 347
1.4552	SCS 21	GX7CrNiNb18-9				Z4CNNb19-10M				J92710		
1.4568	SUS 631	X 7 CrNiAl 17 7		316S111		Z 9 CAN 17-7	2388	Z8CNA17-07		S17700	09C 17NJU1	17-7PH
1.4571	SUS 316Ti	X6CrNiMoTi17-12-2	316Ti	320S31	58J	Z6NDT17-12	2350	X6CrNiMoTi17 12	F.3535		10C 17N13M2T	AISI 316Ti
1.4581	SCS 22	GX5CrNiMoNb18		318C17		Z4CNDNb18-12M						
1.4583		X6CrNiMoNB18-12	318	303S21		Z15CNS20-12		X15CrNiSi2 12				
1.4585		GX7CrNiMoCuNb1818						X6CrNiMoTi17 12		J94651		
1.4821		X20CrNiSi254				Z20CNS25-04				S44635		
1.4823		GX40CrNiSi274								J92605		
1.4828	SCS17	X15CrNiSi20-12	309	309S24	58C	Z15CNS20-12			F.8414	S30900	20C 20N14S2	AISI 309
1.4833	SUS 309 S	X6CrNi2213	309S	309S13		Z15CN24-13				J93400		
1.4845	SUH310	X12CrNi25-21	310S	310S24		Z12CN25-20	2361	X6CrNi2520	F.331	S31008	20C 23N18	AISI 310S
1.4878	SUS321	X12CrNiTi18-9	321	321S20	58B	Z6CNT18-12(B)	2337	X6CrNiTi1811	F.3553	S32100		ACX315
1.4891		X5CrNiNb18-10	Ss30415				2372					
1.4893		X8CrNiNb11	S30815				2368					
1.4948		X6CrNi1811	304H	304S51		Z5CN18-09	2333			S30480		
1.4980		X5NiCrTi2515	660				2570			S66286		Incoloy A 286
		X5NiCrN3525										
		X2CrNiMoN18134	S31753									
		X2CrNiMoN25227										

TECHNICAL DATA
Technical Information
Material Groups

K

VDI 3323	Material Description	Composition / Structure / Heat Treatment	HB	HRc
15	Grey cast iron	Pearlitic / Ferritic	180	10

Mat'l No.	JIS	DIN	AISI/ASTM/SAE	BS	EN	AFNOR	SS	UNI	UNE / IHA	UNS	GOST	Brands
0.6010	FC100	GG10	A48 20 B	Grade 100	GJL-100	Ft 10 D	0100	G10	FG10		Sc 10	
0.6015	FC150	GG15	A48 25 B	Grade 150	GJL-150	Ft 15 D	0115	G15	FG15		Sc 15	
0.6020	FC200	GG20	A48 30 B	Grade 220	GJL-200	Ft 20 D	0120	G20	FG20	W06020	Sc 20	
0.6025	FC250	GG25	A48 40 B	Grade 260	GJL-250	Ft 25 D	0125	G25	FG25		Sc 25	
0.6660		GGL-NiCr 20 2	1050/700/7	Grade F2	GJLA-XNiCr 20-2	L-NC 202	0523	-		F41002		Ni-Resist 2
1.4449	SUS317	X5CrNiMo17133	317	317S16				X5CrNiMo1815		S31700		AISI 317

K

VDI 3323	Material Description	Composition / Structure / Heat Treatment	HB	HRc
16	Grey cast iron	Pearlitic (Martensitic)	260	26

Mat'l No.	JIS	DIN	AISI/ASTM/SAE	BS	EN	AFNOR	SS	UNI	UNE / IHA	UNS	GOST	Brands
0.6025	FC250	GG25	A48 40 B	Grade 260	GJL-250	Ft 25 D	0125	G25	FG25		Sc 25	
0.6030	FC300	GG30	A48 45 B	Grade 300	GJL-300	Ft 30 D	0130	G30	FG30		Sc 30	
0.6035	FC350	GG35	A48 50 B	Grade 350	GJL-350	Ft 35 D	0135	G35	FG35		Sc 35	
0.6040	FC400	GG40	A48 60 B	Grade 400	GJL-400	Ft 40 D	0140	G40	FC40		Sc 40	

K

VDI 3323	Material Description	Composition / Structure / Heat Treatment	HB	HRc
17	Nodular cast iron	Ferritic	160	3

Mat'l No.	JIS	DIN	AISI/ASTM/SAE	BS	EN	AFNOR	SS	UNI	UNE / IHA	UNS	GOST	Brands
0.7033	FCD350-22L	GGG35.3	-	350/22L40	GJS-350-22-LT	FGS 370-17	0717-15	-				
0.7040	FCD400	GGG40	60-40-18	SNG 420-12	GJS-400-15	FCS 400-12	0717-02	GS 400-12	FG E38-17	F32800	Vc 42-12	
0.7043	FCD 370	GGG40.3	60-40-18	SNG 370-17	GJS-400-18-LT	FGS 370-17	0717-12	GSO 42-17			Vc 42-12	
0.6040	FC400	GG40	A48 60 B	Grade 400	GJL-400	Ft 40 D	0140	G40	FC40		Sc 40	

K

VDI 3323	Material Description	Composition / Structure / Heat Treatment	HB	HRc
18	Nodular cast iron	Pearlitic	250	25

Mat'l No.	JIS	DIN	AISI/ASTM/SAE	BS	EN	AFNOR	SS	UNI	UNE / IHA	UNS	GOST	Brands
0.7050	FCD500	GGG50	80-55-06	SNG 500-7	GJS-500-7	FGS 500-7	0727-02	GS 500-7	FG E50-7	F33100	Vc 50-2	
0.7060	FCD600	GGG60	80-55-06	SNG 600-3	GJS-600-3	FGS 600-3	0732-03	GS 600-3	FG E60-2		Vc 60-2	
0.7070	FCD700	GGG70	100-70-03	SNG 700-2	GJS-700-2	FGS 700-2	0737-01	GS 700-2	FG S70-2	F34800	Vc 70-2	
0.7652	FCDA-NiMn 13 7	GGG NiMn 13-7	-	Grade S6	GJSA-XNiMn 13-7	FGS Ni13 Mn7	0772	-				Nodumag
0.7660		GGG NiCr 20-2	A436 D2	Grade S2	GJSA-XNiCr 20-2	FGS Ni20 Cr2	0776	-				Ni-Resist D-2

K

VDI 3323	Material Description	Composition / Structure / Heat Treatment	HB	HRc
19	Malleable cast iron	Ferritic	130	

Mat'l No.	JIS	DIN	AISI/ASTM/SAE	BS	EN	AFNOR	SS	UNI	UNE / IHA	UNS	GOST	Brands
0.8135	FCMW330	GTS-35	32510	B 340-12	GJMB350-10	MN 35-10	0815	GMN 35	GTS35		Kc 35-10	

K

VDI 3323	Material Description	Composition / Structure / Heat Treatment	HB	HRc
20	Malleable cast iron	Pearlitic	230	21

Mat'l No.	JIS	DIN	AISI/ASTM/SAE	BS	EN	AFNOR	SS	UNI	UNE / IHA	UNS	GOST	Brands
0.8145	FCMW370	GTS-45	A220-40010	P 440-7	GJMB450-6	MN 450	0852	GMN 45				
0.8155	FCMP490	GTS-55	50005	P 510-4	GJMB-550-4	MP 50-5	0854	GMN 55			Kc 60-3	
0.8165	FCMP590	GTS-65	70003	P 570-3	GJMB-650-2	MN 650-3	0856	GMN 65				
0.8170	FCMP690	GTS-70	90001	P 690-2	GJMB-700-2	MN 700-2	0862	GMN 70			Kc 70-2	

N

VDI 3323	Material Description	Composition / Structure / Heat Treatment	HB	HRc
21	Aluminum-wrought alloy	Not Curable	60	

Mat'l No.	JIS	DIN	AISI/ASTM/SAE	BS	EN	AFNOR	SS	UNI	UNE / IHA	UNS	GOST	Brands
3.0205		Al99	Al99									
3.0255	(A1050)	Al99.5	1000	L31		A59050C					D1	
3.3315		AlMg1										

N

VDI 3323	Material Description	Composition / Structure / Heat Treatment	HB	HRc
22	Aluminum-wrought alloy	Curable, Hardened	100	

Mat'l No.	JIS	DIN	AISI/ASTM/SAE	BS	EN	AFNOR	SS	UNI	UNE / IHA	UNS	GOST	Brands
3.1325		AlCuMg1									AD35	
3.1655	A2011	AlCuSiPb										
3.2315		AlMgSi1									AK9	
3.4345		AlZnMgCu0,5	7050	L86		AZ4GU/9051		811-04				
3.4365	7075	AlZnMgCu1,5	7075	7075		7075		AlZn5.8MgCuCr			B95	

N

VDI 3323	Material Description	Composition / Structure / Heat Treatment	HB	HRc
23	Aluminum-cast, alloyed	≤ 12% Si, Not Curable	75	

Mat'l No.	JIS	DIN	AISI/ASTM/SAE	BS	EN	AFNOR	SS	UNI	UNE / IHA	UNS	GOST	Brands
3.2163		G-AlSi9Cu3									VAL8	
3.2382		GD-AlSi10Mg										
3.2383		G-AlSi0Mg(Cu)	A360.2	LM9			4253					
3.2581		G-AlSi12										
3.3561		G-AlMg5										
3.5101		G-MgZn4sE1Zr1	ZE41	MAG5								
3.5103		MgSE3Zn27r1	EZ33	MAG6		G-TR3Z2						
3.5812		G-MgAl8Zn1	AZ81	NMAG1								
3.5912		G-MgAl9Zn1	AZ91	MAG7								
			A356-72	2789		NFA32-201						
	A5052		356.1	LM25			4244				AK7	
		G-AlSi12	A413.2	LM6			4261					
	ADC12	G-AlSi12(Cu)	A413.1	LM20			4260				AK12	
	A6061	GD-AlSi12	A413.0				4247					
	A7075	GD-AlSi8Cu3	A380.1	LM24			4250					

N

VDI 3323	Material Description	Composition / Structure / Heat Treatment	HB	HRc
24	Aluminum-cast, alloyed	≤ 12% Si, Curable, Hardened	90	

Mat'l No.	JIS	DIN	AISI/ASTM/SAE	BS	EN	AFNOR	SS	UNI	UNE / IHA	UNS	GOST	Brands
2.1871		G-AlCu4TiMg										
3.1754		G-AlCu5Ni1,5										
3.2371		G-AlSi7Mg	4218B								AK8	
3.2373	C4BS	G-AlSi9MGWA	SC64D			A-S7G	4251				AK9	
3.2381		G-AlSi10Mg									AK12	
3.5106		G-MgAg3SE2Zr1	QE22	mag12								
		G-ALMG5	GD-AlSi12	LM5		A-SU12	4252					

N

VDI 3323	Material Description	Composition / Structure / Heat Treatment	HB	HRc
26	Copper and Copper Alloys (Bronze / Brass)	Cutting alloys, PB>1%	110	

Mat'l No.	JIS	DIN	AISI/ASTM/SAE	BS	EN	AFNOR	SS	UNI	UNE / IHA	UNS	GOST	Brands
2.0375		CuZn36Pb3									LS60-2	
2.1090		G-CuSn75pb	C93200			U-E7Z5pb4						
2.1096		G-CuSn5ZnPb	c83600	LG2								
2.1098		G-CuSn2Znpb	C83600									
2.1182		G-CuPb15Sn	C23000	LB1		U-pb15E8						

N

VDI 3323	Material Description	Composition / Structure / Heat Treatment	HB	HRc
27	Copper and copper alloys (Bronze / Brass)	CuZn, CuSnZn (Brass)	90	

Mat'l No.	JIS	DIN	AISI/ASTM/SAE	BS	EN	AFNOR	SS	UNI	UNE / IHA	UNS	GOST	Brands
2.0240	C2300	CuZn15									L90	
2.0321		CuZn37	C27200	cz108		CuZn36,CuZn37		C2700			L63	
2.0590		G-CuZn40Fe										
2.0592		G-CuZn35Al1	C86500	U-Z36N3		HTB1						
2.0596		G-CuZn34Al2	C86200	HTB1		U-Z36N3					LTs23AD	
2.1293		CuCrZr	C18200	CC102		U-Cr0-8Zr						

N

VDI 3323	Material Description	Composition / Structure / Heat Treatment	HB	HRc
28	Copper and copper alloys (Bronze / Brass)	CuSn, lead-free copper and electrolytic copper	100	

Mat'l No.	JIS	DIN	AISI/ASTM/SAE	BS	EN	AFNOR	SS	UNI	UNE / IHA	UNS	GOST	Brands
2.0060		E-Cu57										
2.0966		CuAl10Ni5Fe4	C63000	Ca104		U-A10N					BrAD	
2.0975		G-CuAl10Ni	B-148-52									
2.1050		G-CuSn10	c90700	CT1								
2.1052		G-CuSn12	C90800	pb2		UE12P						
2.1292		G-CuCrF35	C81500	CC1-FF								

S

VDI 3323	Material Description	Composition / Structure / Heat Treatment	HB	HRc
31	Heat resistant super alloys	Fe Based, Annealed	200	15

Mat'l No.	JIS	DIN	AISI/ASTM/SAE	BS	EN	AFNOR	SS	UNI	UNE / IHA	UNS	GOST	Brands
1.4558	NCF 800 TB	X2NiCrAlTi3220	N08800	NA15								
1.4562		X1NiCrMoCu32287	N08031									
1.4563		X1NiCrMoCuN31274	N08028			Z1NCDU31-27-03	2584				EK77	
1.4864	SUH330	X12NiCrSi36-16	330	NA17		Z12NCS37-18				N08330		
1.4865	SCH15	GX10NiCrSi38-18		330C40				XG50NiCr3919		J94605		
1.4958		X5NiCrAlTi3120										

S

VDI 3323	Material Description	Composition / Structure / Heat Treatment	HB	HRc
32	Heat resistant super alloys	Fe Based, Aged	280	30

Mat'l No.	JIS	DIN	AISI/ASTM/SAE	BS	EN	AFNOR	SS	UNI	UNE / IHA	UNS	GOST	Brands
1.4977		X40CoCrNi2020				Z42CNKDWNb						

S

VDI 3323	Material Description	Composition / Structure / Heat Treatment	HB	HRc
33	Heat resistant super alloys	Ni or Co Based, Annealed	250	25

Mat'l No.	JIS	DIN	AISI/ASTM/SAE	BS	EN	AFNOR	SS	UNI	UNE / IHA	UNS	GOST	Brands
2.4360		NiCu30Fe		NA13		NU30				N04400		Monel400
2.4603		NiCr 30 FeMo	S390A			NC22FeD						Hastelloy G-30
2.4610		NiMo16cR16Ti								N26455		HastelloyC-4
2.4630		NiCr20Ti		HR5,203-4		NC20T				N06075		Nimonic75
2.4631	NCF 80A	NiCr20TiAl		Hr40		NC20TA				N07080	KHN77TYuR	Nimonic 80A
2.4642	NCF 690	NiC29Fe				Nnc30Fe				N06690		Inconel 690
2.4856		NiCr22Mo9Nb		NA21		NC22FeDNb				N06625		Inconel 625
2.4858		NiCr21Mo		NA16		NC21FeDU				N08825	KHN38VT	Incoloy 825

S

VDI 3323	Material Description	Composition / Structure / Heat Treatment	HB	HRc
34	Heat resistant super alloys	Ni or Co Based, Aged	350	38

Mat'l No.	JIS	DIN	AISI/ASTM/SAE	BS	EN	AFNOR	SS	UNI	UNE / IHA	UNS	GOST	Brands
2.4375		NiCu30Al	4676	NA18		NU30AT				N05500		Monel K500
2.4662		NiFe35Cr14MoTi	5660			Z5NCDT42				N09901		Incoloy 901
2.4668		NiCr19Fe19NbMo	5383	HR8		NC19eNB				N07718		Inconel 718
2.4670		S-NiCr13A16MoNb	5391	Mar-46		NC12AD						Nimocast 713
2.4694		NiCr16fE7TiAl								N07751		Inconel 751
2.4955		NiFe25Cr20NbTi										
2.4964		CoCr20W15Ni	5772			KC20WN						Haynes 25
		CoCr22W14Ni	AMS 5772			KC22WN						

S

VDI 3323	Material Description	Composition / Structure / Heat Treatment	HB	HRc
35	Heat resistant super alloys	Ni or Co Based, Cast	320	34

Mat'l No.	JIS	DIN	AISI/ASTM/SAE	BS	EN	AFNOR	SS	UNI	UNE / IHA	UNS	GOST	Brands
2.4669		NiCr15Fe7TiAl				NC15TNbA				N07750		Inconel X750
2.4685		G-NiMo28								N10665		Hastelloy B
2.4810		G-NiMo30										Hastelloy C
2.4973		NiCr19Co11MoTi	AMS 5399			NC19KDT					VT5-1	
3.7115		TiAl5Sn2								R54520	VT1-00	ATI Grade 6

S

VDI 3323	Material Description	Composition / Structure / Heat Treatment	HB	HRc
36	Titanium alloys	Pure Titanium	400 Rm	

Mat'l No.	JIS	DIN	AISI/ASTM/SAE	BS	EN	AFNOR	SS	UNI	UNE / IHA	UNS	GOST	Brands
2.4674		NiCo15Cr10MoAlTi	AMS 5397							N13100		IN 100
3.7025		Ti1	R50250	2TA1						R50250		ATI 30 CP Gr. 1
3.7225		Ti1pd	R52250	TP1						R52250		

S

VDI 3323	Material Description	Composition / Structure / Heat Treatment	HB	HRc
37	Titanium alloys	Alpha + Beta Alloys, Hardened	1050 Rm	

Mat'l No.	JIS	DIN	AISI/ASTM/SAE	BS	EN	AFNOR	SS	UNI	UNE / IHA	UNS	GOST	Brands
3.7124		TiCu2		2TA21-24								
3.7145		TiAl6Sn2Zr4Mo2Si	R54620							R54620		
3.7165		TiAl6V4	AMS R56400	TA10-13		T-A6V					VT6	
3.7185		TiAl4Mo4Sn2		TA45-51								
3.7195		TiAl3V2.5								R56320		ATI 3-2.5
		TiAl4Mo4Sn4Si0.5										
		TiAl5Sn2.5	AMS R54520	TA14/17		T-A5E						
		Ti6Al4VELI	AMS R56401	TA11								

TECHNICAL DATA
Technical Information
Material Groups

H

VDI 3323	Material Description	Composition / Structure / Heat Treatment	HB	HRc
38	Hardened steel	Hardened	550	55

Mat'l No.	JIS	DIN	AISI/ASTM/SAE	BS	EN	AFNOR	SS	UNI	UNE / IHA	UNS	GOST	Brands
1.1231	S70 C-CSP	Ck 67	1070	060 A 67	C 67S	XC 68	1770	C 70	F.5103		70	
1.1248	C 75	Ck 75	1078, 1080	060 A 78	C 75S	XC 75	1774	C 75	F.5107		75	
1.1274	SUP 4	Ck 101	1095	060 A 96	C 100S	XC100	1870	C100	F.5117			
1.1545	SK 3	C 105 W1	W1	BW 2	C 105U	Y1 105	1880	C 100 KU	F.5118		U10A	
1.2762		75CrMoNiW67	-	-	-	-	-	-				
1.3401	SCMnH1	GX120Mn12	A128(A)			Z120M12	2183	GX120Mn12	F.8251		110G13L	
1.4021	SUS 420 J1	X 20 Cr 13	420	420 S 37	X 20 Cr 13	Z 20 C 13	2303	X 20 Cr 13	F.5261		20KH13	ATI 420
1.4109	SUS 440 A	X 65 CrMo 14	440 A	-	X 70 CrMo 15	Z 70 D 14	-	-				ATI 440A
1.4112	SUS 440 B	X 90 CrMoV 18	440 B	409 S 19	X 90 CrMoV 18	Z 2 CND 18 05	2327	X CrTi 12				
1.4125	SUS 440 C	X 105 CrMo 17	440 C	-	X 105 CrMo 17	Z 100 CD 17	-	X 105 CrMo 17			95KH18	ATI 440C
1.6746		32NiCrMo14-5	-	832M31	32NiCrMO145	35NCD14	-	-				
1.7176	SUP9(A)	55Cr3	5155	527A60	48	55C3	2253	55Cr3				
1.7225	SCM 440 (H)	42CrMo4	4140	708 M 40	42 CrMo 4	42 CD 4	2244	42 CrMo 4	F.1252		38HM	

H

VDI 3323	Material Description	Composition / Structure / Heat Treatment	HB	HRc
40	Chilled cast iron	Cast	400	42

Mat'l No.	JIS	DIN	AISI/ASTM/SAE	BS	EN	AFNOR	SS	UNI	UNE / IHA	UNS	GOST	Brands
0.9620		GX260NiCr42	A532 IB	Grade 2 A	GJN-HV520	FB Ni4 Cr2 BC	0512	-		F45001		Ni-Hard2
0.9625		GX330NiCr42	A532 IA	Grade 2 B	GJN-HV550	FB Ni4 Cr2 HC	0513	-		F45000		Ni-Hard1
0.9630		GX300 CrNiSi 9 5 2	A532 ID	Grade 2 C	GJN-HV600	FB Cr9 Ni5	0457	-		F45003		Ni-Hard 4
0.9640		GX300CrMoNi1521	-	-	-	-	-	-		F45005		
0.9650		GX260Cr27	-	Grade 3 D		-	0466	-				
0.9655		GX300CrNMo271	-	Grade 3 E		-	-	-			20C 25N20S2	
1.4841	SUH 310	X15CrNiSi25-20	310	314S31	X 15 CrNiSi 25 20	Z15CNS25-20	-	-		S31400		Cronifer 2520

H

VDI 3323	Material Description	Composition / Structure / Heat Treatment	HB	HRc
41	Hardened cast iron	Hardened	550	55

Mat'l No.	JIS	DIN	AISI/ASTM/SAE	BS	EN	AFNOR	SS	UNI	UNE / IHA	UNS	GOST	Brands
0.9635		GX300 CrMo 15 3	-	-	-	-	-	-				
0.9645		GX260 CrMoNi 20 21	-	-	-	-	-	-		F45007		

EDP No. INDEX

EDP No.	Page
E2410	686
E2429	687
E2461	716
E2462	716
E2463	716
E2464	696~697
E2492	684
E2498	810~811
E2509	698
E2510	695
E2512	685
E2516	702~703
E2524	719
E2535	683
E2551	707
E2552	708
E2553	704~705
E2554	706
E2570	690~692
E2571	693~694
E2572	699
E2573	700~701
E2574	709
E2575	709
E2576	712
E2577	712
E2595	710
E2596	711
E2597	713
E2598	714
E2606	718
E2675	805
E2676	806
E2677	807
E2678	808
E2679	809
E2751	727~728
E2752	729~730
E2753	720
E2754	736
E2755	725
E2756	726
E2757	722
E2761	717
E2762	721
E2764	723
E2765	724
E2766	734
E2767	735
E2768	737
E2776	715
E2777	732
E2778	731
E2779	733
E2SET553	705
E3462	682
E3570	680
E3574	681
E5521	487
E5522	487
E5711	490
E5742	490

EDP No.	Page
E5908	481
E5909	482
E5910	480
E5930	483
E5E39	491
E5E40	491
E5E47	485
E5E48	486
E5E49	488
E5E50	489
E5E51	484
E5H22	472
E5H23	473
E5H24	466~468
E5H25	469~471
E9410	678
E9720	679
E9936	642
E9938	646
E9940	640
E9941	648
E9942	644
E9A26	650
E9A29	643
E9A30	645
E9A31	647
E9A32	641
E9A33	651
E9A34	652
E9A35	649
E9E43	653
EE515	420
EH830	418
EH831	422
EH840	418
EH841	422
EH852	421
EH862	421
EH911	414~415
EH912	414~415
EH913	416~417
EH914	416~417
EH915	419
EH916	419
EH917	423
EH918	423
EH919	424
EH920	424
EH921	425
EH942	425
EHE54	405
EHE55	405
EI450	507
EI451	506
EI880	505
EI881	509
EI996	510~511
EI997	502~503
EIA13	513
EIA14	514
EIB04	516
EIB86	512

EDP No.	Page
EIB87	508
EIB88	515
EIB93	504
EL612	689
EL623	688
EMB72	457
EMB73	457
EP922	492
EP923	492
EP924	493
EP925	493
ESB94	51
ESD02	52
G8A01	135
G8A02	136
G8A28	112~113
G8A36	123~124
G8A37	128
G8A38	114
G8A39	130
G8A45	131~134
G8A46	107~110
G8A47	127
G8A50	126
G8A52	125
G8A53	115
G8A54	111
G8A59	116
G8A60	118~122
G8B08	129
G8B54	106
G8B59	105
G8D62	117
G8D63	137
G8D64	138
G9400	596
G9410	575~576
G9424	563
G9425	578
G9432	586
G9433	582
G9437	550
G9438	551
G9439	580
G9444	566
G9445	568~569
G9447	584
G9448	589
G9449	591
G9452	571
G9453	593
G9454	552
G9455	553
G9527	567
G9528	581
G9540	590
G9553	575~576
G9624	548
G9634	556
G9A42	595
G9A68	565
G9A69	588

EDP No. INDEX

EDP No.	Page
G9A70	549
G9B80	572~574
G9B81	554~555
G9B82	557~558
G9B83	559
G9B84	560~561
G9B85	562
G9D67	273
G9D68	273
G9D69	274
G9D75	273
G9D76	273
G9D77	274
G9F45	594
G9F46	594
G9G44	564
G9G45	570
G9G46	577
G9G47	579
G9G48	583
G9G49	585
G9G50	587
G9G51	592
GA936	642
GA938	646
GA940	640
GA941	648
GA942	644
GAA26	650
GAA29	643
GAA30	645
GAA31	647
GAA32	641
GAA33	651
GAA34	652
GAA35	649
GAE43	653
GAE53	275
GM810	361~362
GM811	367
GM812	369
GM813	351
GM814	371
GM815	355
GM817	368
GM818	356
GM819	360
GM834	370
GM839	359
GM876	350
GM883	363~365
GM886	352~353
GM895	366
GM8A1	357~358
GM902	354
GMF52	448
GMF53	448
GMF54	443
GMF55	443
GMF56	449
GMF57	449
GMF58	444

EDP No.	Page
GMF59	444
GMF60	450~451
GMF61	450~451
GMF62	445~447
GMF63	445~447
GMG12	455
GMG13	455
GMG14	456
GMG15	456
GMG16	452
GMG17	452
GMG18	453~454
GMG19	453~454
GMG24	403
GMG25	403
GMG26	404
GMG27	404
GMG28	400
GMG29	400
GMG30	401~402
GMG31	401~402
GMG40	398~399
GMG41	398~399
GMG55	442
GMG56	442
GUF39	523
GUF40	522
GYF94	625
GYF95	624
GYF96	621
GYF97	618
GYF98	626
GYF99	619
GYG01	620
GYG02	623
GYG03	627
GYG52	622
GYG72	619
GYG74	621
GYG76	623
GYG77	618
JAH22	472
JAH23	473
JAH24	466~468
JAH25	469~471
ML012	792
ML022	792
ML032	793
ML042	793
ML062	794~795
ML072	796
ML092	797~798
ML102	799~804
ML112	792
ML122	792
ML132	793
ML142	793
ML162	794~795
ML172	796
ML212	792
ML222	792
ML232	793

EDP No.	Page
ML242	793
ML262	794~795
ML272	796
RTI104	527
SEM845	245~253
SEM846	172~181
SEM846	182~184
SEMD98	166~171
SEMD99	185~192
SEME01	212~218
SEME35	234~238
SEME36	254~255
SEME61	193~211
SEME64	219~233
SEME70	239~244
SEME71	256~259
SEME72	260~265
SEME73	266~270
SEME75	271~272
SGED27	532~533
SGED28	531
SGED29	534~535
SGED30	537~538
SGED31	536
XMB110A	58
XMB110D	59
XMB120C	58
XMB130A	59
XMB260T	58
XMF110V	65~69
XMM110V	59
XMR110A	60~64
XMR110D	65~69
XMR120C	60~64
XMR260T	60~64
XSEMD98	84
XSEME01	87~88
XSEME36	90
XSEME59	85
XSEME60	86
XSEME68	89
XSEME75	91
ZBC	70
ZBS	71
ZBT	72
ZMC	92
ZMS	93
ZMT	94
ZRC	73
ZRS	74
ZRT	74